CITY OF PORTLAND

PORTLAND, MAINE

INTERNATIONAL FERRY TERMINAL

MULTI-PURPOSE MARINE TRANSPORTATION FACILITY

APPROVED

JOSEPH D. CASALE COUNCILOR DATE
CHAIRMAN, CONSTRUCTION OVERSIGHT COMMITTEE

CITY MANAGER DATE

DIRECTOR OF ECONOMIC DEVELOPMENT DATE

ENGINEER, WATERFRONT DIVISION DATE

CHILDS ENGINEERING CORPORATION
BOX 333 MEDFIELD, MASSACHUSETTS 02052 U.S.A.

VICE PRESIDENT DATE

STATE OF MAINE
DAVID LIVINGSTON
PROFESSIONAL ENGINEER

LOCATION MAP

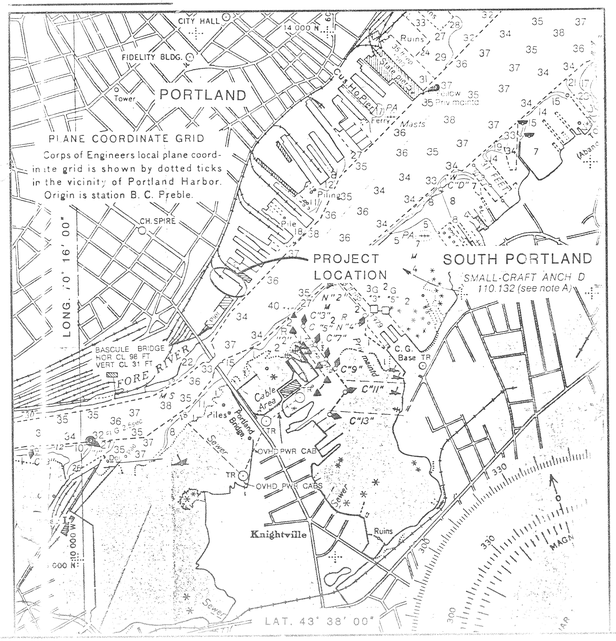

LIST OF DRAWINGS

SHEET NO.		TITLE
	-	TITLE SHEET
1	-	SITE PLAN
2	-	PROPOSED SITE PLAN
3	-	CONSTRUCTION BASELINE AND DEMOLITION
4	-	PIER GENERAL ARRANGEMENT
5	-	PILE AND PILE CAP PLAN
6	-	PILE DETAILS
7	-	PILE CAP DETAILS
8	-	CRANE BEAM DETAILS
9	-	PRECAST DECK PLANKS
10	-	CAST-IN-PLACE DECK
11	-	REINFORCING DETAILS
12	-	MISCELLANEOUS DETAILS
13	-	FENDER SYSTEM FABRICATION
14	-	FENDER SYSTEM ASSEMBLY
15	-	BACKLANDS - GENERAL ARRANGEMENT
16	-	BACKLANDS - CROSS SECTION
17	-	BACKLANDS & ROADWAYS - CROSS SECTIONS

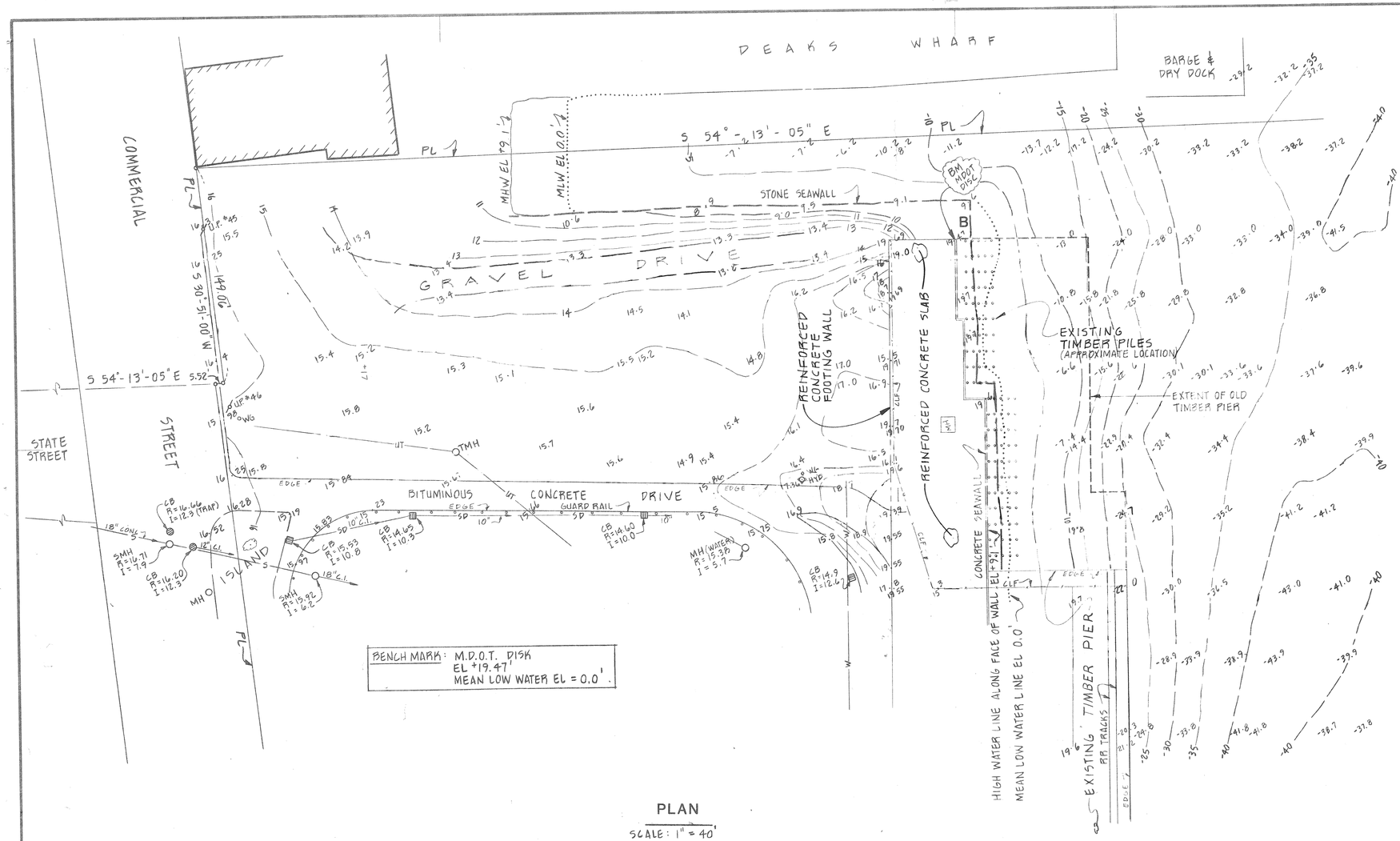

BENCH MARK: M.D.O.T. DISK
EL +19.47'
MEAN LOW WATER EL = 0.0'.

PLAN
SCALE: 1" = 40'

LEGEND

—— 14 —— EXISTING CONTOURS
-30.1 SOUNDING IN FEET BELOW MLW = 0.0
17.0 SPOT ELEVATION IN FEET ABOVE MLW

NOTE WELL:

1.) PILES OF DEBRIS EXIST ON THE SITE.
2.) VEGETATION INCLUDING GRASS, WEEDS, SHRUBS, ETC. EXIST ON THE SITE.
3.) PILES OF TIMBER, RUBBLE, TIMBER PILES AND MISC. MATERIAL EXIST ON THE SITE.
4.) TIMBER PIER PREVIOUSLY EXTENDING TO THE NORTH HAS BEEN REMOVED UNDER ANOTHER CONTRACT. TIMBER PILES ARE REPORTED TO HAVE BEEN REMOVED COMPLETELY EXCEPT WHERE SHOWN.

STATE OF MAINE · DAVID LIVINGSTON PORTER No. 4788 · REGISTERED PROFESSIONAL ENGINEER

NOTE:
INFORMATION TAKEN FROM PLAN TITLED "PLAN OF LAND ON COMMERCIAL ST. PORTLAND, ME." OCT. 26, 1987, BY OWEN HASKELL, INC. CIVIL ENGINEERS, LAND SURVEYORS. OF SOUTH PORTLAND, ME.

SITE PLAN

INTERNATIONAL FERRY TERMINAL
PORTLAND, MAINE

FEBRUARY 1988

CHILDS ENGINEERING CORPORATION
BOX 333 MEDFIELD, MASSACHUSETTS 02052 U.S.A.

REVISIONS

DRAWN: MTF, JFB
CHECKED: RGF
APPD: DLP
DATE: 2/88

DWG NO 81387.00-2
SHEET 1 OF 17

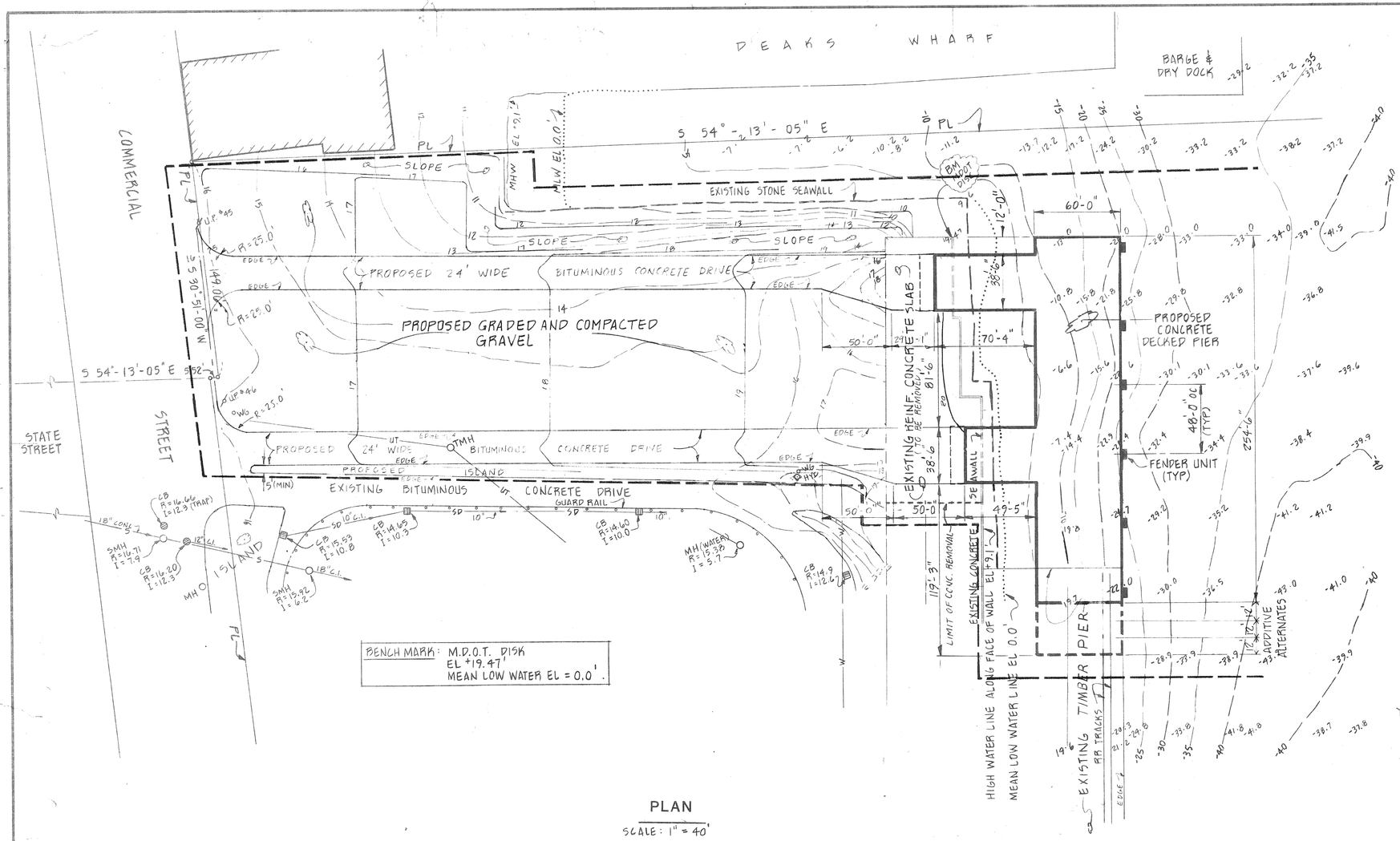

BENCH MARK: M.D.O.T. DISK
EL +19.47'
MEAN LOW WATER EL = 0.0'.

PLAN
SCALE: 1" = 40'

LEGEND

-40	EXISTING CONTOURS
18	PROPOSED CONTOURS
-30.1	SOUNDING IN FEET BELOW MLW = 0.0
17.0	SPOT ELEVATION IN FEET ABOVE MLW
— — —	LIMIT OF WORK

NOTE:

1.) CONTRACTOR MAY USE AVAILABLE SPACE WITHIN THE LIMIT OF WORK FOR MATERIAL STORAGE, OFFICE TRAILER, EQUIPMENT, AND EMPLOYEE PARKING, AS DIRECTED BY THE ENGINEER.

PROPOSED SITE PLAN

INTERNATIONAL FERRY TERMINAL
PORTLAND, MAINE

FEBRUARY 1988

STATE OF MAINE
DAVID LIVINGSTON PORTER
No. 4788
REGISTERED PROFESSIONAL ENGINEER

REVISIONS

CHILDS ENGINEERING CORPORATION
BOX 333 MEDFIELD, MASSACHUSETTS 02052 U.S.A.

DRAWN: MTF, JFB
CHECKED: RGF
APP'D: DLP
DATE: 2/88

DWG NO. 81387.00-3
SHEET 2 OF 17

1/3|3 CONSTRUCTION BASELINE DETAIL
NTS

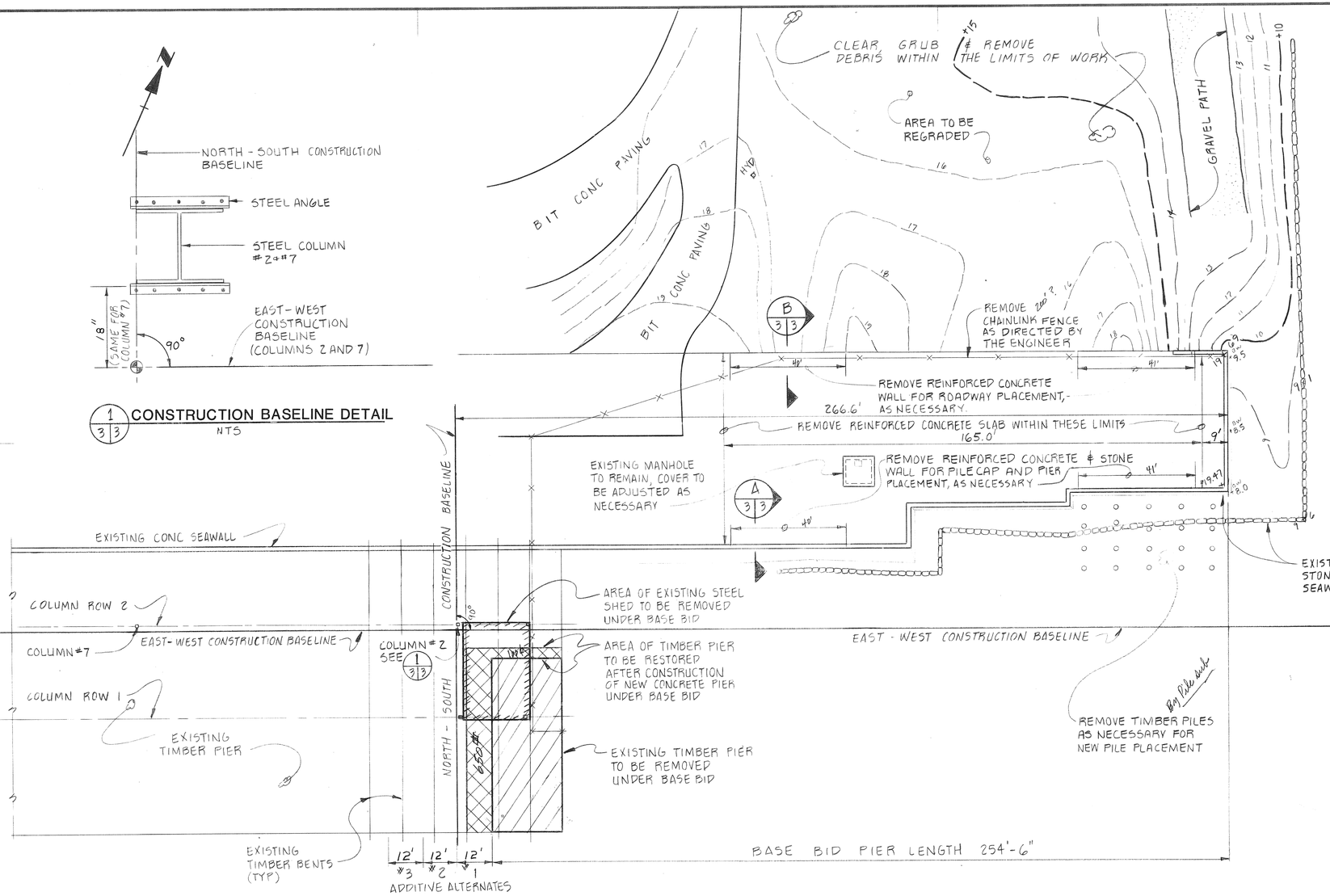

NOTE: SIMILAR AREAS OF EXISTING TIMBER PIER AND STEEL SHED TO BE REMOVED AS NECESSARY FOR ADDITIVE ALTERNATES.

PLAN
SCALE: 1" = 20'

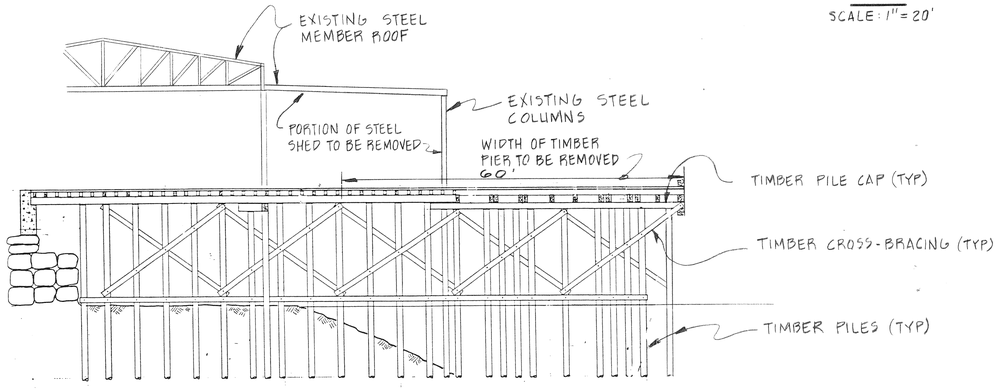

TYPICAL CROSS SECTION
(NOT TO SCALE)

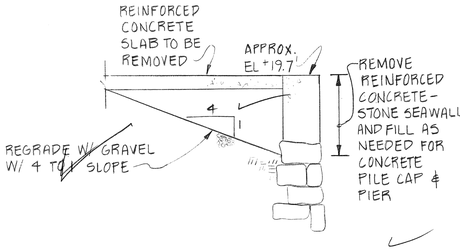

A 3|3 REINFORCED CONCRETE WALL DEMOLITION
SCALE: 1/4" = 1'-0"

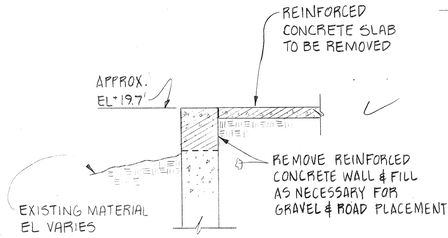

B 3|3 REINFORCED CONCRETE WALL DEMOLITION
SCALE: 1/4" = 1'-0"

GENERAL NOTES:

1.) ALL MATERIAL CALLED FOR TO BE REMOVED & NOT REUSED SHALL BECOME THE PROPERTY OF THE CONTRACTOR & SHALL BE DISPOSED OF IN A LEGAL MANNER OFF THE SITE.

STATE OF MAINE · DAVID LIVINGSTON PORTER No. 4738 · REGISTERED PROFESSIONAL ENGINEER

CONSTRUCTION BASELINE AND DEMOLITION

INTERNATIONAL FERRY TERMINAL
PORTLAND, MAINE

FEBRUARY 1988

CHILDS ENGINEERING CORPORATION
BOX 333 MEDFIELD, MASSACHUSETTS 02052 U.S.A.

DRAWN: DWJ, MTF
CHECKED: RGF
APPD: DLP
DATE: 2/88

DWG NO. 81387.00-4
SHEET 3 OF 17

REVISIONS

MILLER BLUEPRINTING CO.

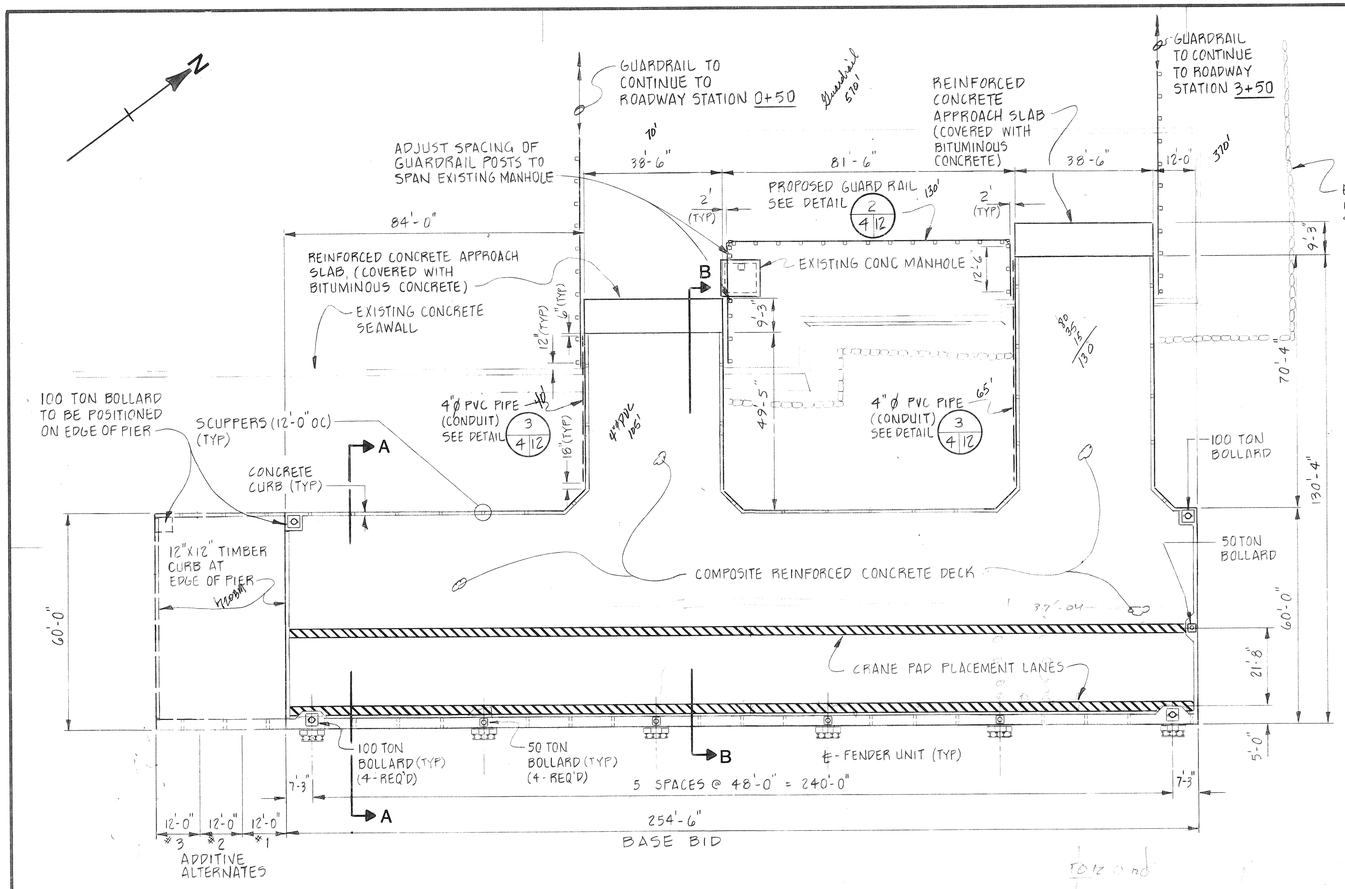

PLAN
(PROPOSAL "A")
SCALE: 1" = 20'

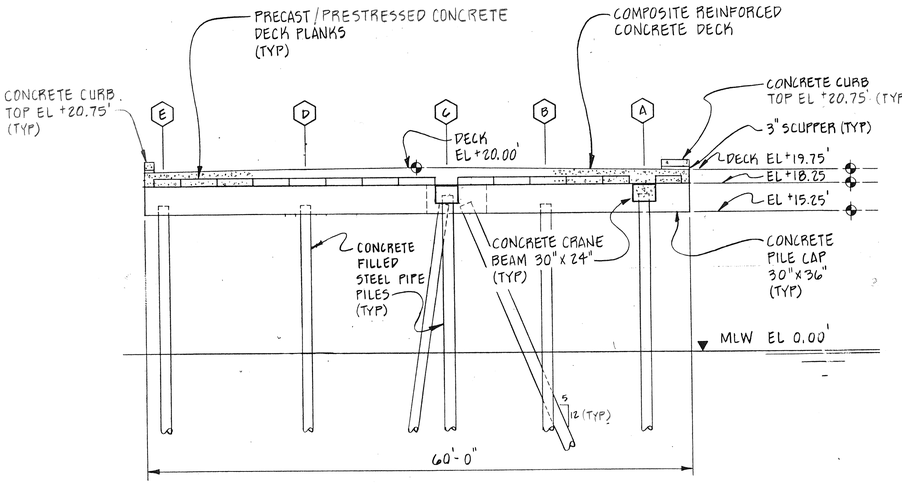

SECTION A-A
(PROPOSAL "A")
SCALE: 1/8" = 1'-0"
(PROPOSAL "B" SIMILAR WITH STEEL H-PILES)

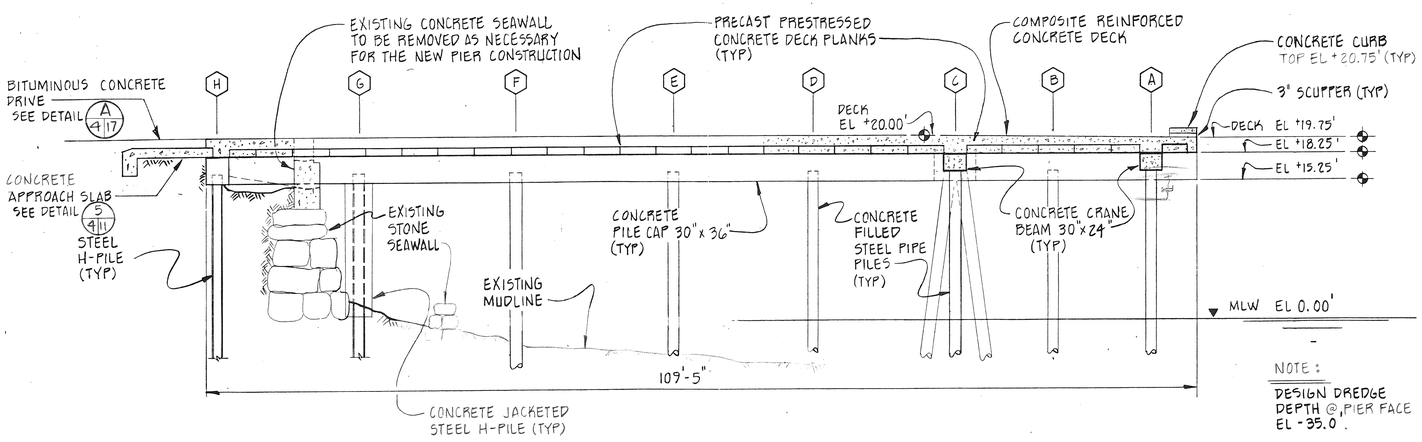

SECTION B-B
(PROPOSAL "A")
SCALE: 1/8" = 1'-0"
(PROPOSAL "B" SIMILAR WITH STEEL H-PILES)

NOTE:
DESIGN DREDGE DEPTH @ PIER FACE EL -35.0'.

PIER GENERAL ARRANGEMENT

INTERNATIONAL FERRY TERMINAL
PORTLAND, MAINE

DECEMBER 1987

STATE OF MAINE DAVID LIVINGSTON PORTER No. 4788 REGISTERED PROFESSIONAL ENGINEER

REVISIONS

CHILDS ENGINEERING CORPORATION
BOX 333 MEDFIELD, MASSACHUSETTS 02052 U.S.A.

DRAWN: M.FOLEY
CHECKED: RGF
APP'D: DLP
DATE: 2/88

DWG NO. 81387.00-5
SHEET 4 OF 17

129008

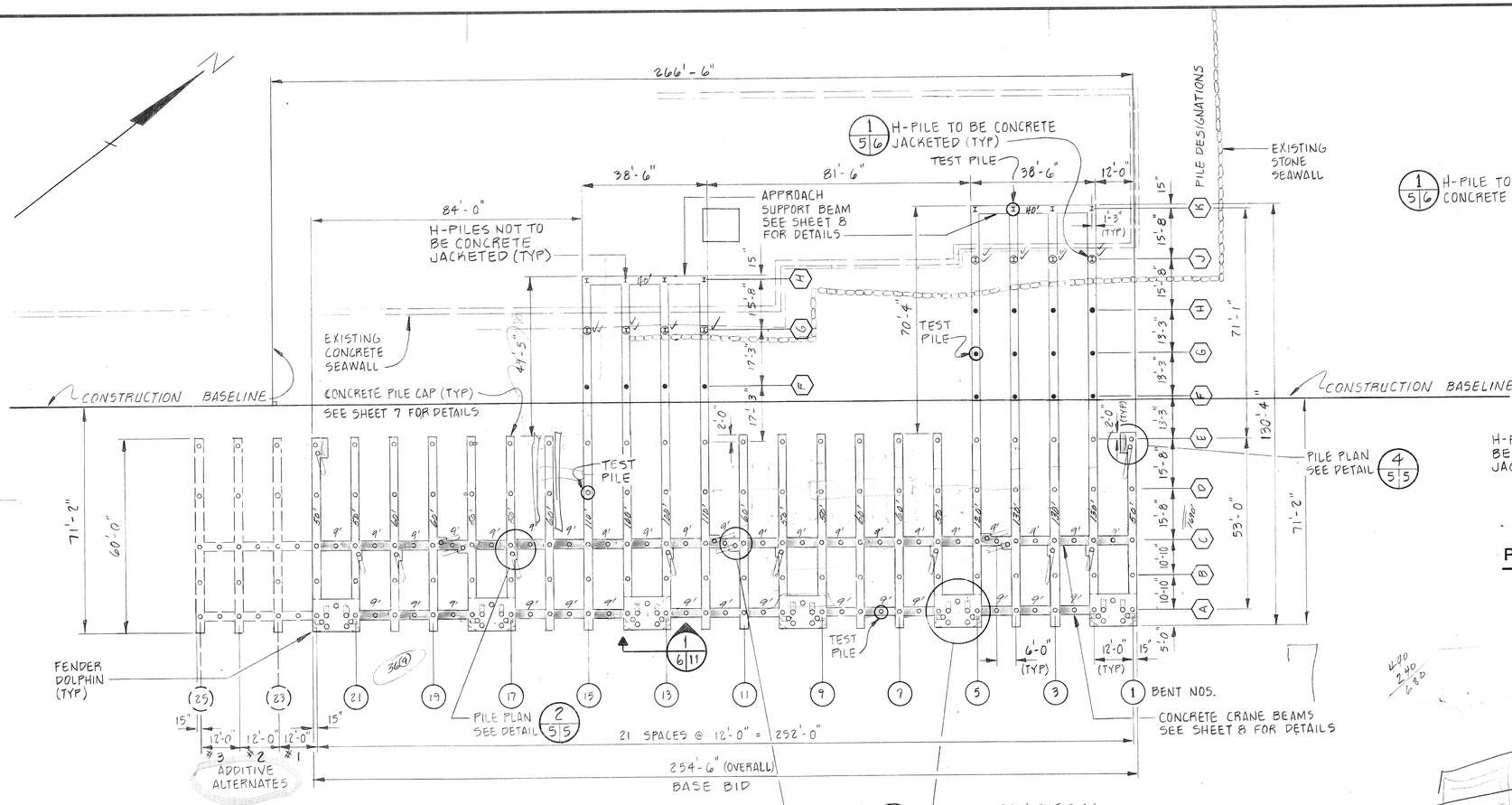

PILE / CAP PLAN
(PROPOSAL "A")
SCALE: 1" = 20'

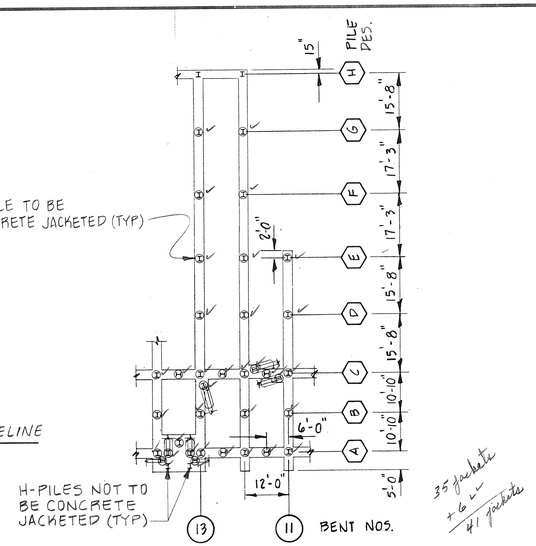

(PARTIAL PLAN)

PILE CONFIGURATION FOR PROPOSAL "B"
SCALE: 1" = 20'

LEGEND

	(PROPOSAL "A")	(PROPOSAL "B")
•	STEEL PIPE PILE - (16"ϕ W/.375" WALL THICKNESS)	OR STEEL H-PILE (HP14×89)
○	STEEL PIPE PILE - (16"ϕ W/.500" WALL THICKNESS)	OR STEEL H-PILE (HP14×117)
⊲	STEEL PIPE BATTER PILE (16"ϕ W/.500" WALL THICKNESS)	OR STEEL H-PILE (HP14×117)
I	STEEL H-PILE (HP 14×89) (PROPOSAL "A & B")	

NOTE:

1.) ALL STEEL H-PILES JACKETED W/ CONCRETE TO EL -6.0' OR 1' BELOW MUDLINE EXCEPT WHERE NOTED.

2.) PILES SHALL BE CUT OFF @ ELEVATION +16.25' @ PILE CAPS & +17.25 @ CRANE BEAMS UNLESS OTHERWISE NOTED.

3.) ALL PILES SHALL BE DRIVEN TO 135 TON CAPACITY.

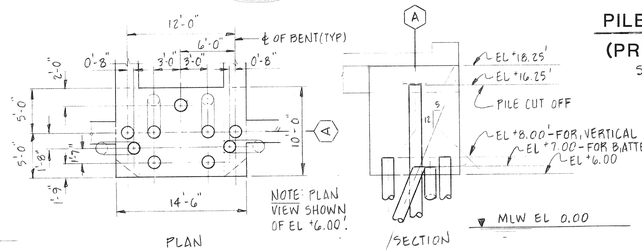

1/5|5 DETAIL - PILE PLAN AT DOLPHIN
SCALE: 1/8" = 1'-0"
(PROPOSAL "A")
(PROPOSAL "B" SIMILAR WITH STEEL H-PILES)

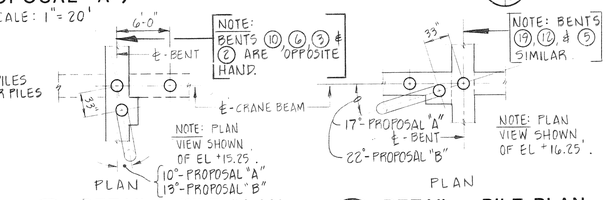

2/5|5 DETAIL - PILE PLAN
SCALE: 1/8" = 1'-0"
(PROPOSAL "A")
(PROPOSAL "B" SIMILAR WITH STEEL H-PILES)

3/5|5 DETAIL - PILE PLAN
SCALE: 1/8" = 1'-0"
(PROPOSAL "A")
(PROPOSAL "B" SIMILAR WITH STEEL H-PILES)

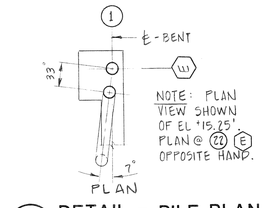

4/5|5 DETAIL - PILE PLAN
SCALE: 1/8" = 1'-0"
(PROPOSAL "A")
(PROPOSAL "B" SIMILAR WITH STEEL H-PILES)

PILE AND PILE CAP PLAN

INTERNATIONAL FERRY TERMINAL
PORTLAND, MAINE

FEBRUARY 1988

STATE OF MAINE · DAVID LIVINGSTON PORTER No. 4788 · REGISTERED PROFESSIONAL ENGINEER

REVISIONS

CHILDS ENGINEERING CORPORATION
BOX 333 MEDFIELD, MASSACHUSETTS 02052 U.S.A.

DRAWN: M.FOLEY
CHECKED: RGF
APPD: DLP
DATE: 2/88

DWG NO. 81387.00-6
SHEET 5 OF 17

THIS IS PROPRIETARY

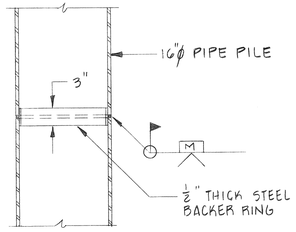

SECTION

PIPE PILE SPLICE DETAIL

SCALE: 1"=1'-0"

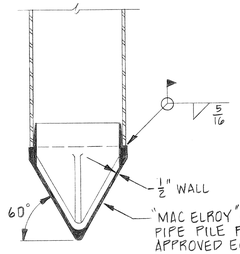

SECTION

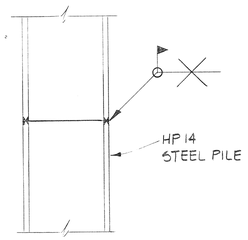

ELEVATION

PIPE PILE POINT

SCALE: 1"=1'-0"

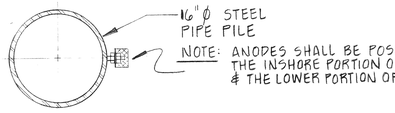

PLAN

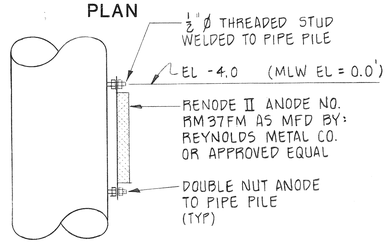

ELEVATION

CATHODIC PROTECTION - PIPE PILES

NOT TO SCALE

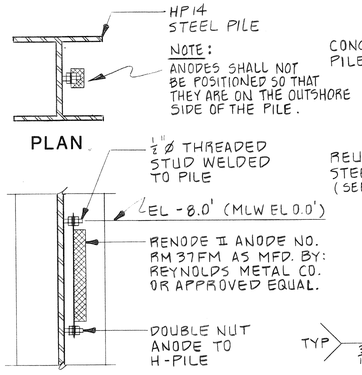

PLAN

SECTION

CATHODIC PROTECTION - H-PILES

NOT TO SCALE

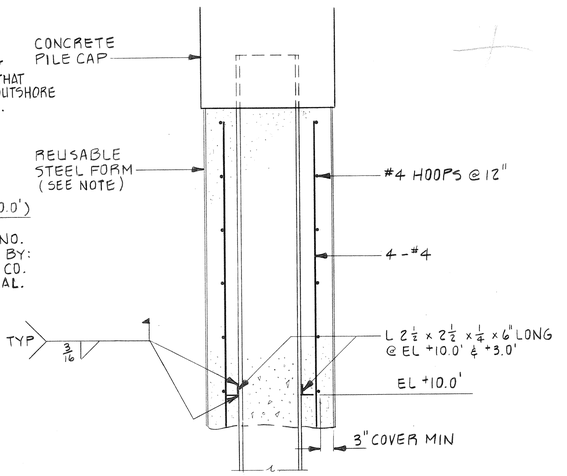

PLAN

SECTION

PIPE PILE TO PILE CAP CONNECTION DETAIL

SCALE: ½"=1'-0"

NOTE WELL:

1.) ALL PIPE PILES SHALL BE FILLED WITH CONCRETE AFTER DRIVING (3000 PSI).

2.) ALL PIPE PILES SHALL BE COATED FROM FINAL CUT-OFF ELEVATION TO 10' BELOW EXISTING MUDLINE.

3.) STEEL H-PILES SHALL BE COATED FROM AN ELEVATION 1' ABOVE THE BOTTOM OF THE CONCRETE JACKET TO 10' BELOW THE EXISTING MUDLINE.

4.) REINFORCING SHALL BE GRADE 60, EPOXY COATED, AND CONFORM TO ASTM A615 & A775.

5.) CONCRETE JACKETS SHALL HAVE A COMPRESSIVE STRENGTH OF 4000 PSI @ 28 DAYS.

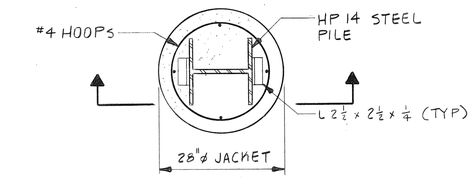

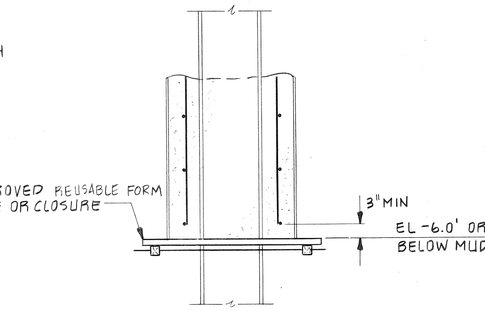

1/5/6 CONCRETE PILE JACKET DETAIL

SCALE: ¾"=1'-0"

NOTE:
WHERE INTERSECTION OF BATTER & VERTICAL PILES PRECLUDE FULL PLACEMENT OF JACKET THE VERTICAL PILE SHALL BE CAST AS DETAILED & INTERFERENCE AREA AT BATTER PILE SHALL BE FORMED WITH FLEXIBLE FABRIC BAG OR APPROVED ALTERNATE METHOD.

H-PILE SPLICE DETAIL

SCALE: 1"=1'-0"

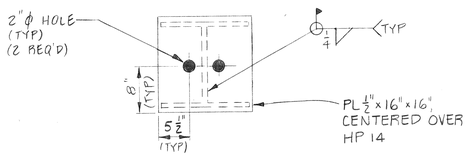

PLAN

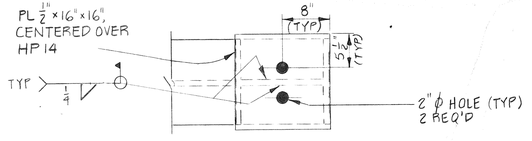

PLAN

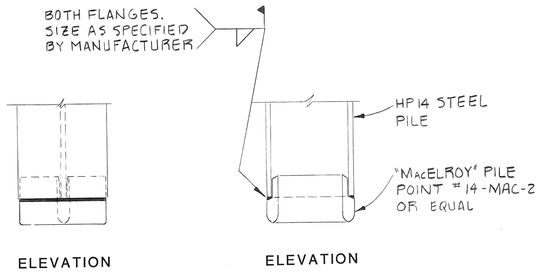

ELEVATION

ELEVATION

H-PILE PILE POINT

SCALE: 1"=1'-0"

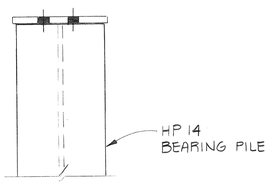

SECTION

H-PILE CONNECTION PLATE DETAIL

SCALE: 1"=1'-0"

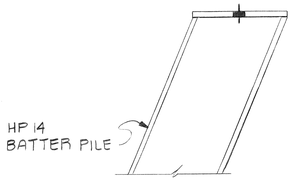

SECTION

BATTERED H-PILE CONNECTION PLATE DETAIL

SCALE: 1"=1'-0"

STATE OF MAINE · DAVID LIVINGSTON PORTER No. 4788 · REGISTERED PROFESSIONAL ENGINEER

PILE DETAILS

INTERNATIONAL FERRY TERMINAL

PORTLAND, MAINE

FEBRUARY 1988

REVISIONS	

CHILDS ENGINEERING CORPORATION
BOX 333 MEDFIELD, MASSACHUSETTS 02052 U.S.A.

CHILDS ENGINEERING CORPORATION

DRAWN: DWJ, RWH
CHECKED: RJE
APP'D: DLP
DATE: 2/88

DWG NO. 81387.00-7
SHEET 6 OF 17

MUTTER REPROGRAPHICS CO.

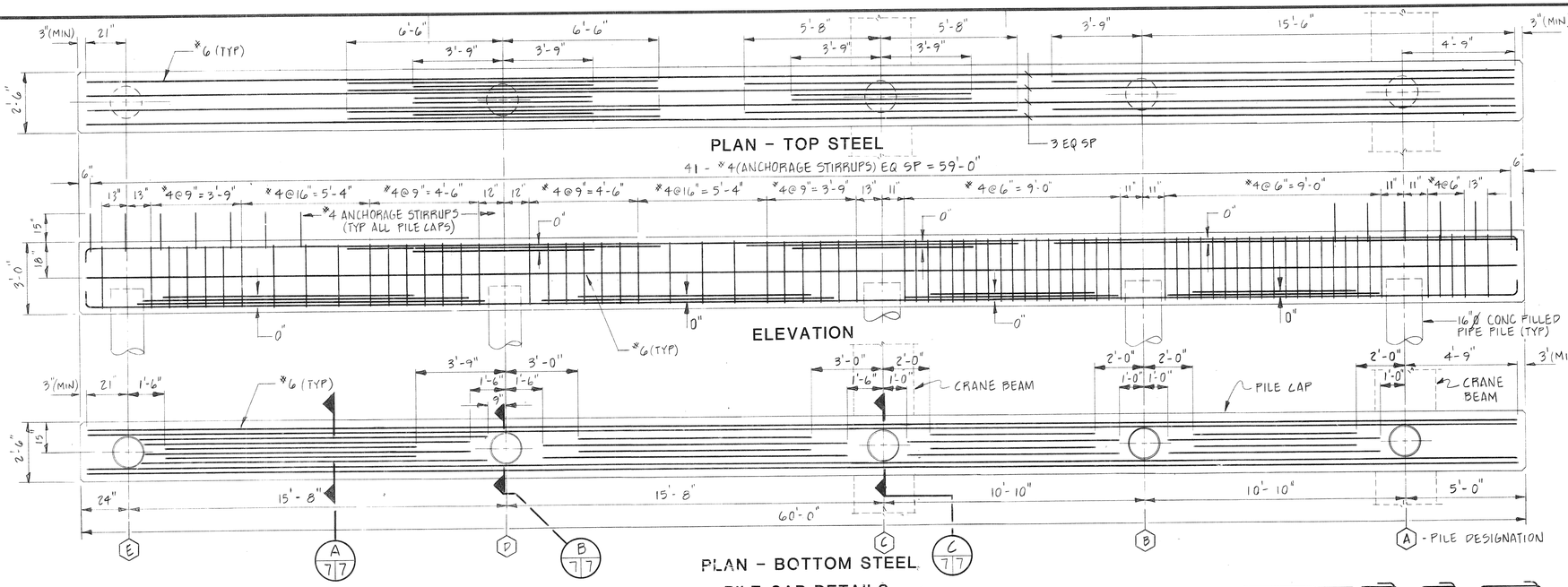

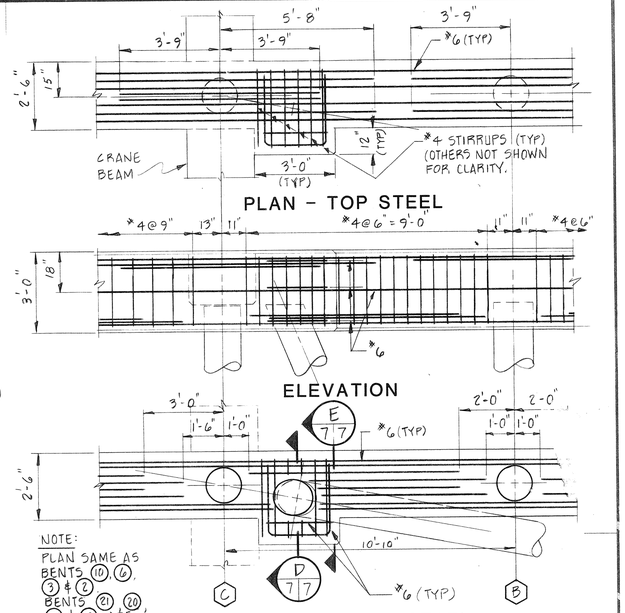

PILE CAP AT BATTER - DETAILS

SCALE: $\frac{3}{8}$" = 1'-0"

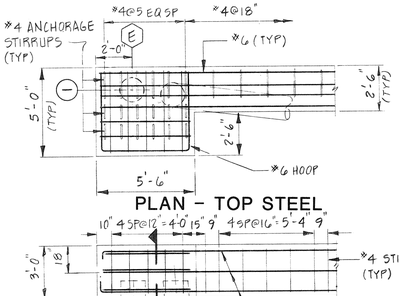

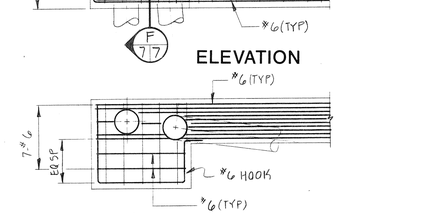

PLAN - BOTTOM STEEL

PILE CAP AT BOLLARD - DETAIL

SCALE: $\frac{1}{4}$" = 1'-0"

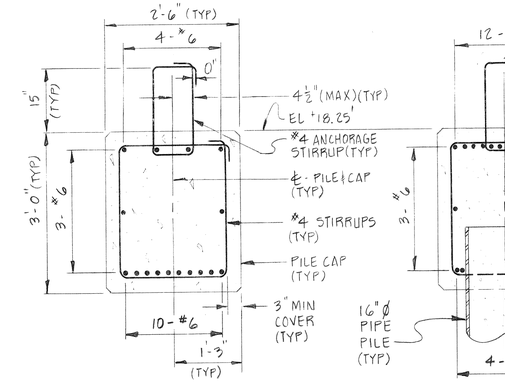

A 7|7 SECTION

SCALE: $\frac{3}{4}$" = 1'-0"

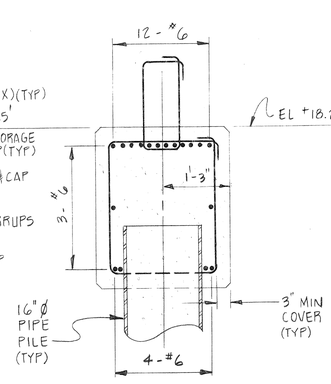

B 7|7 SECTION

SCALE: $\frac{3}{4}$" = 1'-0"

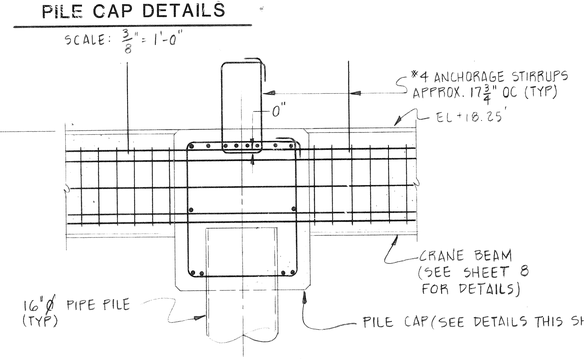

PILE CAP DETAILS

SCALE: $\frac{3}{8}$" = 1'-0"

C 7|7 SECTION - CRANE BEAM TO PILE CAP JUNCTION

SCALE: $\frac{3}{4}$" = 1'-0"

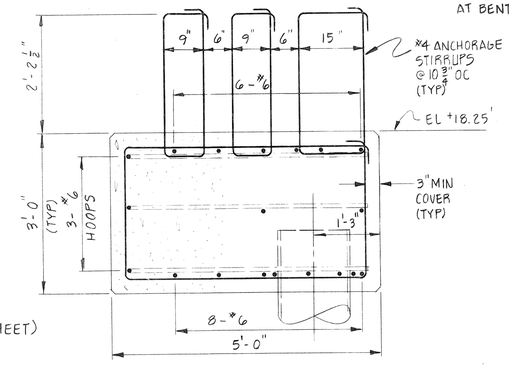

F 7|7 SECTION OF PILE CAPS (1) & (22) AT PILE (E)

SCALE: $\frac{3}{4}$" = 1'-0"

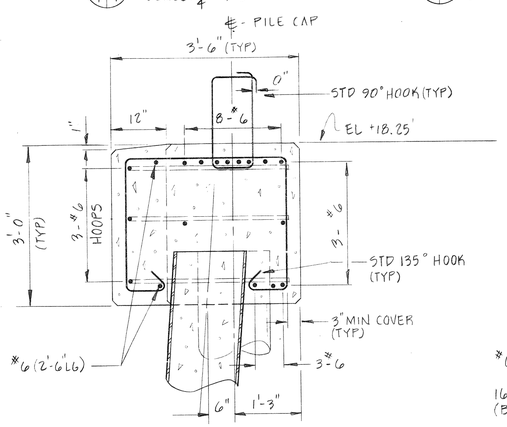

D 7|7 SECTION

SCALE: $\frac{3}{4}$" = 1'-0"

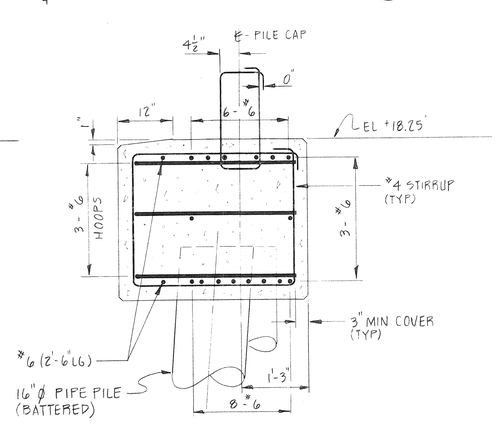

E 7|7 SECTION

SCALE: $\frac{3}{4}$" = 1'-0"

NOTES:

1.) PILES SHOWN ARE PIPE PILES, (PROPOSAL "A" DETAILS SIMILAR FOR H-PILES, PROPOSAL "B").

2.) CONCRETE SHALL HAVE AN COMPRESSIVE STRENGTH OF 4000 PSI @ 28 DAYS.

3.) REINFORCING SHALL BE GRADE 60 EPOXY COATED, AND CONFORM TO ASTM A615 AND A775.

4.) CHAMFER ALL EDGES 1"@ 45° EXCEPT WHERE NOTED.

5.) MINIMUM CONCRETE COVERAGE OVER REINFORCING SHALL BE 3".

6.) SPLICING OF REINFORCEMENT: #6 BARS - 24"
#4 BARS - 12".

7.) ALL DETAILS ARE SHOWN WITH PIPE PILES "A", DETAILS WITH H-PILES PROPOSAL "B" SIMILAR.

PILE CAP DETAILS

INTERNATIONAL FERRY TERMINAL

PORTLAND, MAINE

FEBRUARY 1988

STATE OF MAINE · DAVID LIVINGSTON PORTER No 4788 · REGISTERED PROFESSIONAL ENGINEER

REVISIONS	

CHILDS ENGINEERING CORPORATION
BOX 333 MEDFIELD, MASSACHUSETTS 02052 U.S.A.
CHILDS ENGINEERING CORPORATION

DRAWN: M.FOLEY
CHECKED: RJGF
APPD: DLP
DATE: 2/88

DWG NO. 81387.00-8
SHEET 7 OF 17

MILLER REPROGRAPHICS

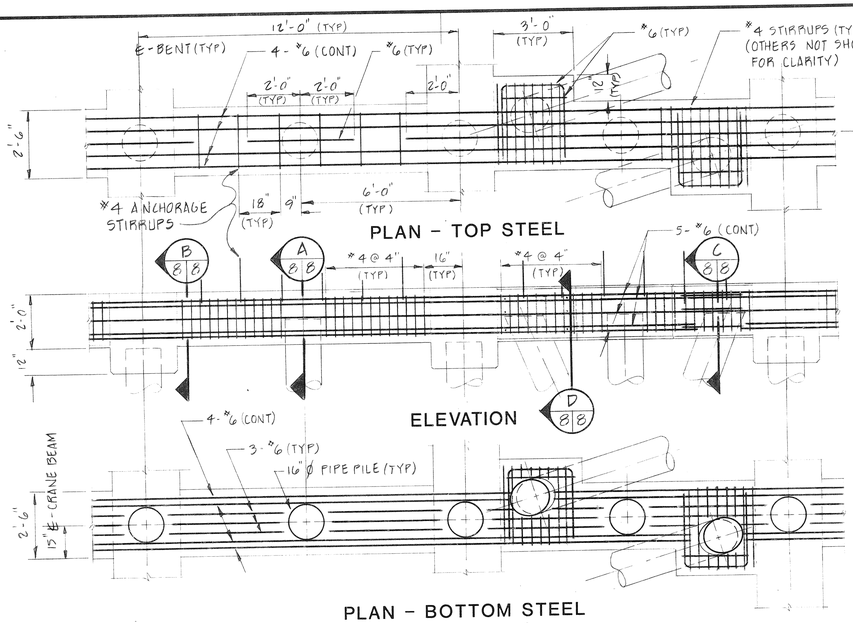

CRANE BEAM DETAILS

SCALE: 3/8" = 1'-0"

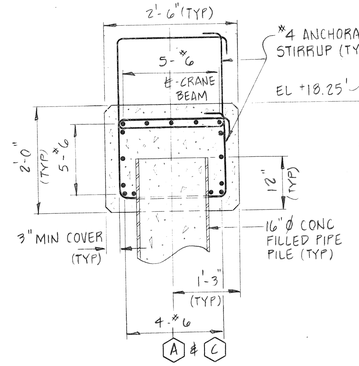

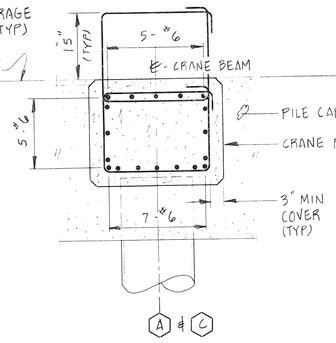

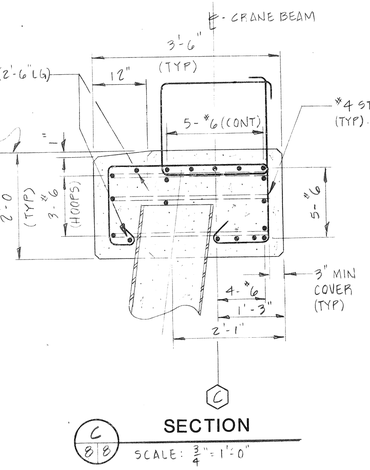

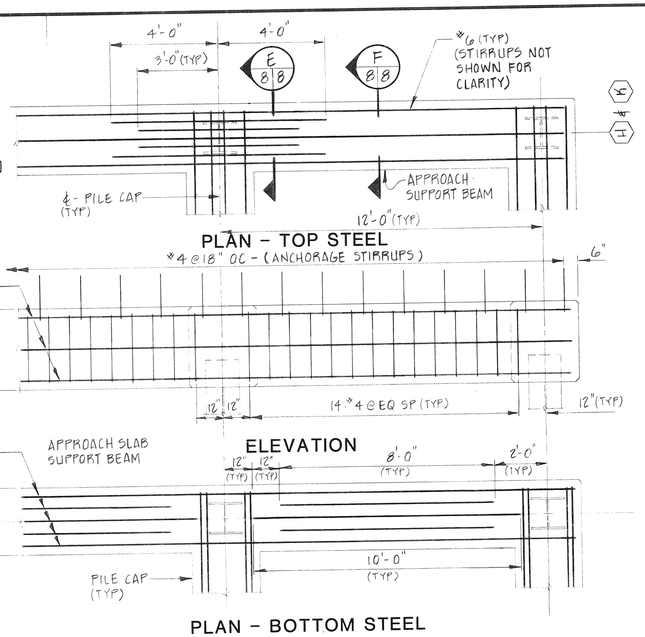

APPROACH SUPPORT BEAM DETAILS

SCALE: 3/8" = 1'-0"

(SAME FOR BOTH PROPOSAL "A" AND PROPOSAL "B")

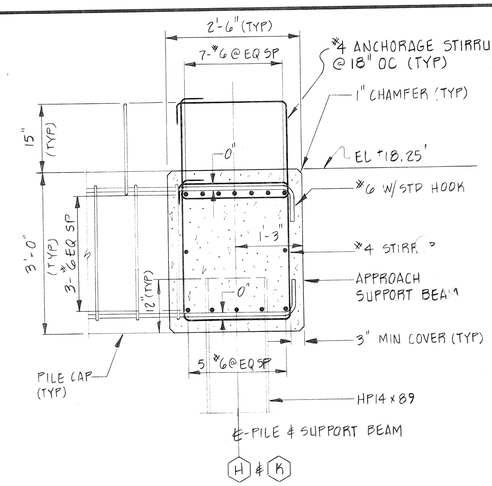

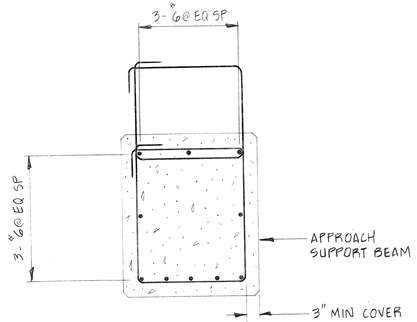

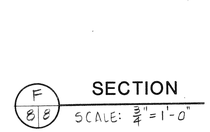

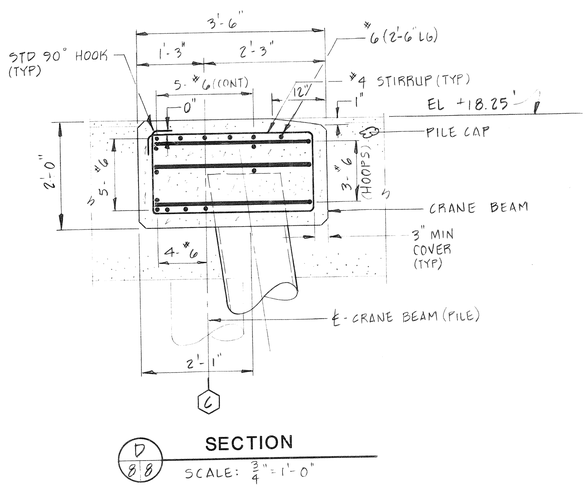

NOTES:

1.) PILES SHOWN ARE PIPE PILES. (PROPOSAL "A" DETAILS SIMILAR FOR H-PILES, PROPOSAL "B").

2.) CONCRETE SHALL HAVE A COMPRESSIVE STRENGTH OF 4000 PSI @ 28 DAYS.

3.) REINFORCING SHALL BE GRADE 60 EPOXY COATED, AND CONFORM TO ASTM A615 AND A775.

4.) CHAMFER ALL EDGES 1" @ 45° EXCEPT WHERE NOTED.

5.) MINIMUM CONCRETE COVERAGE OVER REINFORCING SHALL BE 3".

6.) SPLICING OF REINFORCEMENT: #6 BARS - 24"
#4 BARS - 12".

7.) ALL DETAILS ARE SHOWN WITH PIPE PILES "A", DETAILS WITH H-PILES PROPOSAL "B" SIMILAR.

CRANE BEAM DETAILS

INTERNATIONAL FERRY TERMINAL

PORTLAND, MAINE

FEBRUARY 1988

STATE OF MAINE · DAVID LIVINGSTON PORTER No. 4788 · REGISTERED PROFESSIONAL ENGINEER

CHILDS ENGINEERING CORPORATION
BOX 333 MEDFIELD, MASSACHUSETTS 02052 U.S.A.

REVISIONS

DRAWN: DWJ MTF
CHECKED: RGF
APPD: DLP
DATE: 2/88

DWG NO. 81387.00-9
SHEET 8 OF 17

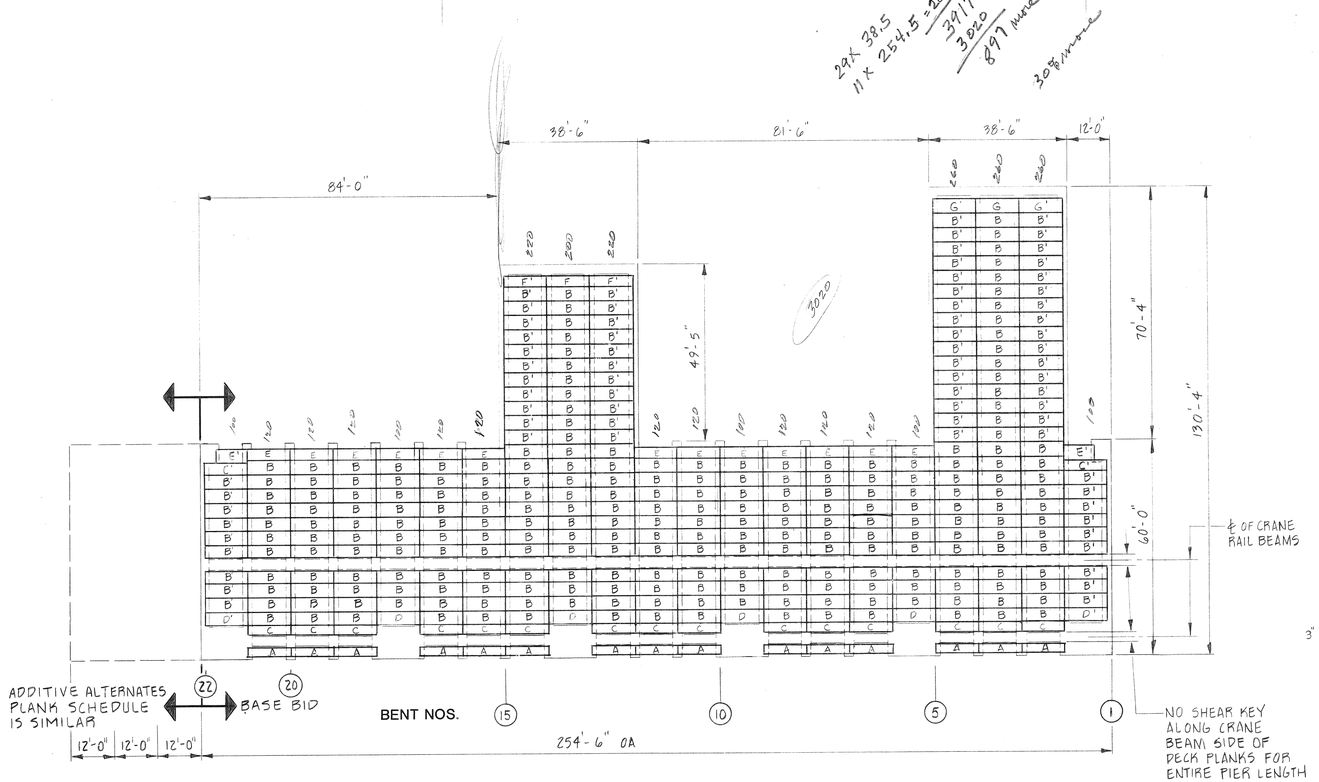

DECK PLANK PLAN

SCALE: 1" = 20'

DECK PLANK SCHEDULE

DESIGNATIONS	DIMENSIONS W L D	REBAR COUNTS a	b	c	QTY
A	2'-9" X 11'-0" X 0'-10"	22	11	5	15
B / E'	4'-0" X 11'-0" X 0'-10"	22	11	7 / 11	238 / 72
C / C'	3'-2" X 11'-0" X 0'-10" / 2'-7" X 11'-0" X 0'-10"	22	11	6 / 7	15 / 2
D / D'	3'-5" X 11'-0" X 0'-10"	22	11	6 / 10	4 / 2
E / E'	3'-1" X 11'-0" X 0'-10" / 4'-6" X 8'-4" X 0'-10"	22 / 18	11 / 9	6 / 8	13 / 2
F / F'	3'-0" X 11'-0" X 0'-10"	22	11	6 / 9	1 / 2
G / G'	3'-11" X 11'-0" X 0'-10"	22	11	7 / 11	1 / 2
	(BASE BID) TOTALS =				367

NOTE: REFER TO "TYPICAL PRESTRESSED SLAB DETAILS" FOR REFERENCE & DETAILS.

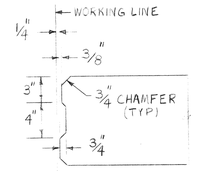

SHEAR KEY DETAIL

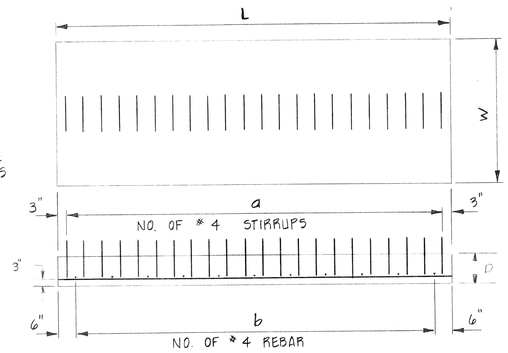

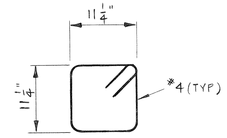

STIRRUP DETAIL

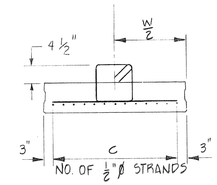

TYPICAL PRESTRESSED SLAB DETAILS

SCALE: 1/2" = 1'-0"

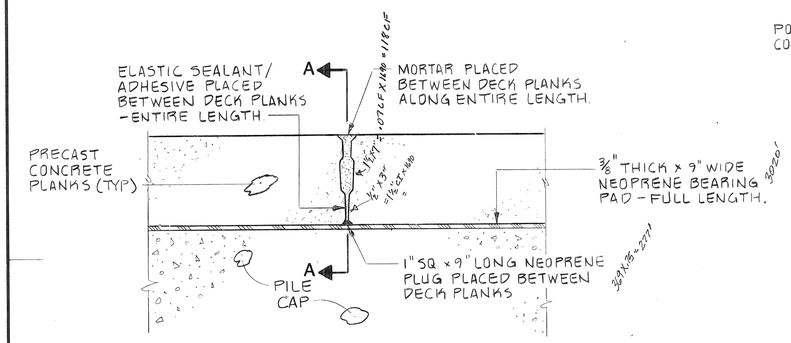

DECK PLANK ASSEMBLY DETAIL

SCALE: 1 1/2" = 1'-0"

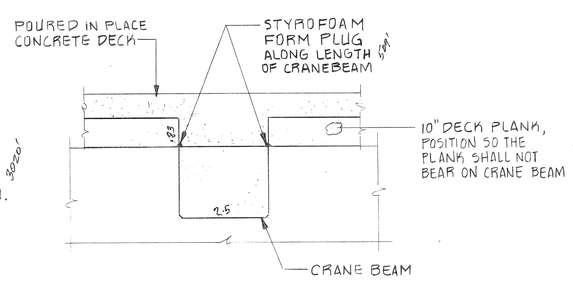

DECK PLANK ASSEMBLY AT CRANE BEAM

SCALE: 1/2" = 1'-0"

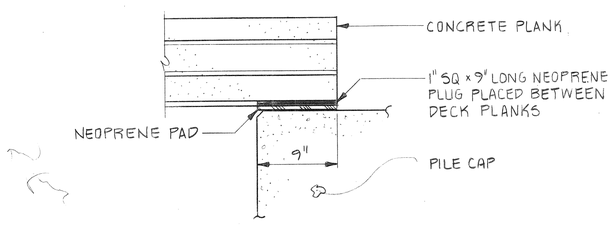

SECTION A-A

SCALE: 1 1/2" = 1'-0"

NOTE:

1.) CONCRETE COMPRESSIVE STRENGTH OF PRECAST DECK PLANKS WILL BE 5000 PSI @ 28 DAYS.

2.) PRESTRESSING STEEL WILL BE LOW RELAXATION WITH AN ULTIMATE STRENGTH OF 270,000 PSI, WITH INITIAL PULL OF 31.0 KIPS/STRAND.

3.) PLANK WIDTHS ILLUSTRATED ARE "WORKING WIDTHS". CONTRACTOR SHALL DETERMINE ACTUAL DIMENSIONS TO ACCOMMODATE SHEAR KEY AND INSTALLATION.

4.) ALL PLANKS TO HAVE A SHEAR KEY ALONG BOTH EDGES EXCEPT WHERE NOTED ON DECK PLANK PLAN.

PRECAST DECK PLANKS

INTERNATIONAL FERRY TERMINAL

PORTLAND, MAINE

FEBRUARY 1988

STATE OF MAINE DAVID LIVINGSTON PORTER No. 4788 REGISTERED PROFESSIONAL ENGINEER

CHILDS ENGINEERING CORPORATION
BOX 333 MEDFIELD, MASSACHUSETTS 02052 U.S.A.

DRAWN: M. FOLEY
CHECKED: RGF
APPD: DLP
DATE: 2/88

DWG NO. 81387.00-10
SHEET 9 OF 17

REVISIONS

MYLER REPROGRAPHICS CO

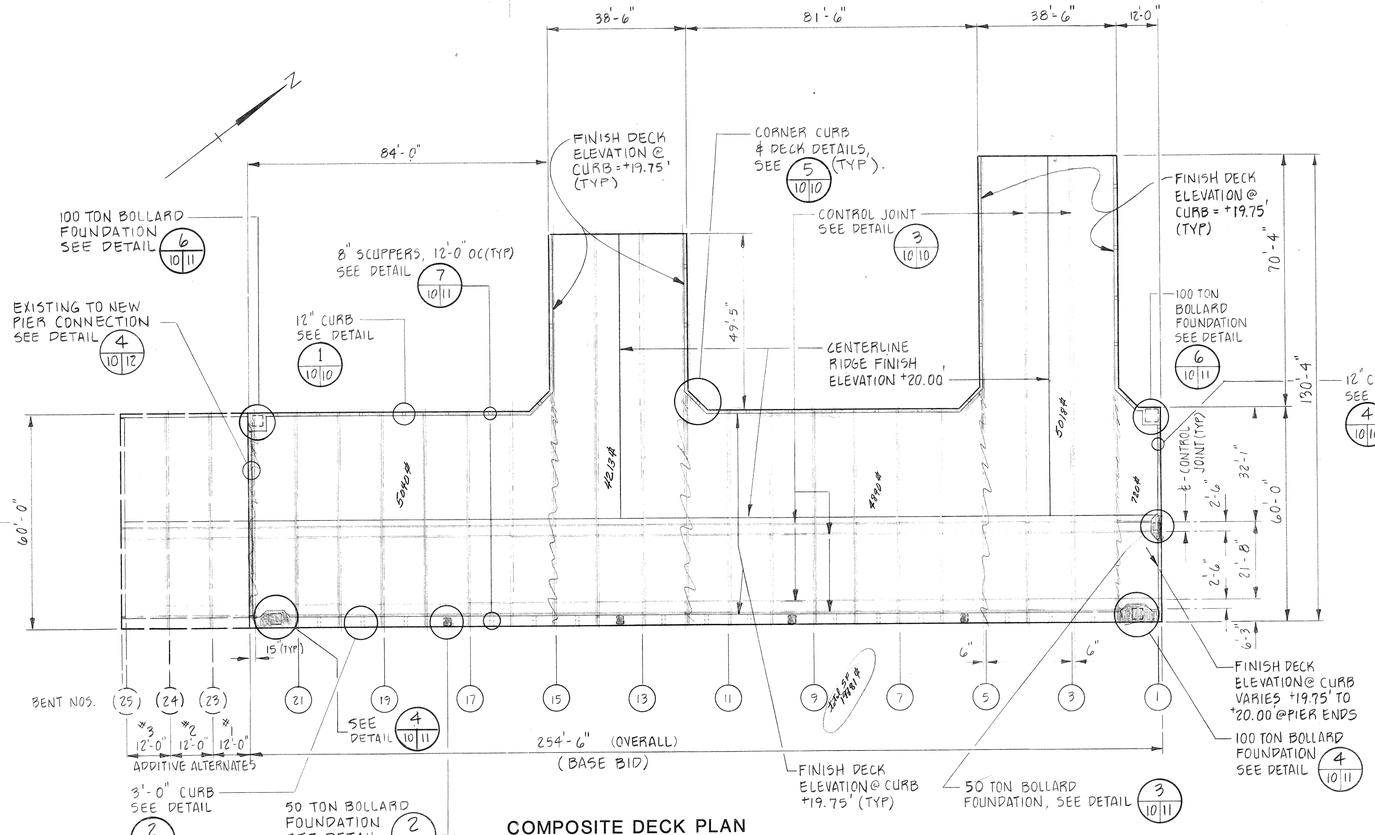

COMPOSITE DECK PLAN

SCALE: 1" = 20'

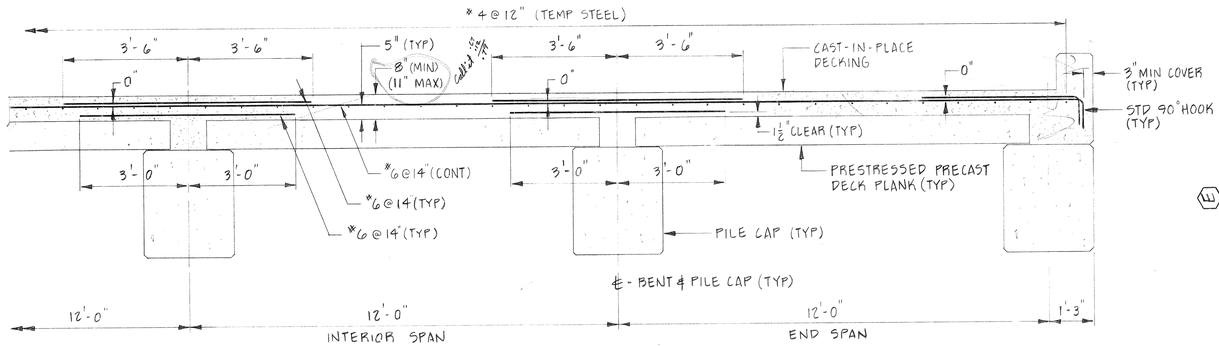

TYPICAL DECK SECTION

SCALE: ½" = 1'-0"

NOTES:

1.) CONCRETE FOR CAST-IN-PLACE DECK SHALL HAVE A COMPRESSIVE STRENGTH OF 4000 PSI @ 28 DAYS.

2.) REINFORCING SHALL BE GRADE 60 EPOXY COATED, AND CONFORM TO ASTM A615 AND A775.

3.) CHAMFER ALL EDGES 1"@ 45° EXCEPT WHERE NOTED.

4.) MINIMUM CONCRETE COVERAGE OVER REINFORCING SHALL BE 3".

5.) SPLICING OF REINFORCEMENT: #6 BARS - 24"
#4 BARS - 12".

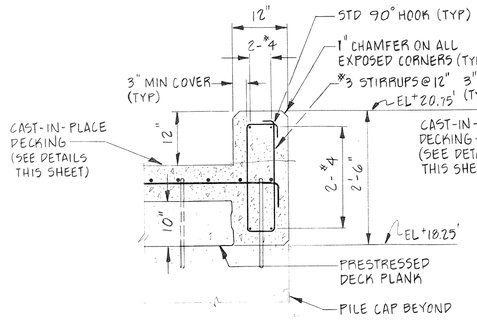

SECTION

1/10/10 **12" CURB DETAIL**

SCALE: ¾" = 1'-0"

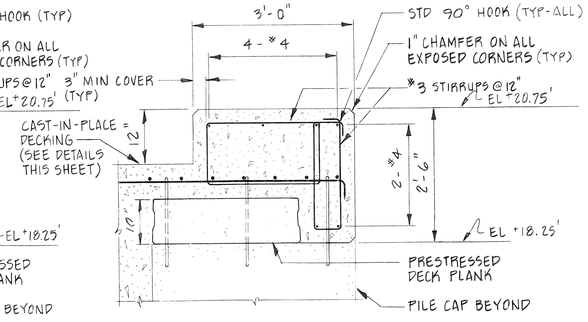

SECTION

2/10/10 **3'-0" CURB DETAIL**

SCALE: ¾" = 1'-0"

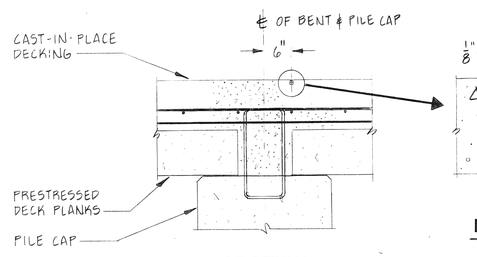

SECTION

3/10/10 **CONTROL JOINT DETAIL**

SCALE: ¾" = 1'-0"

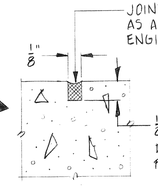

DETAIL

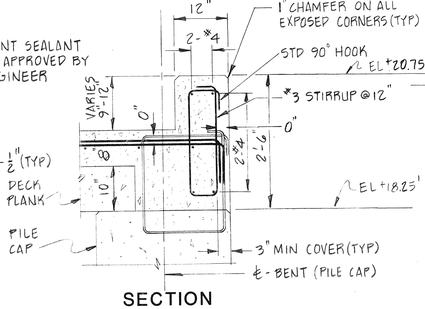

SECTION

4/10/10 **12" CURB DETAIL (PIER END)**

SCALE: ¾" = 1'-0"

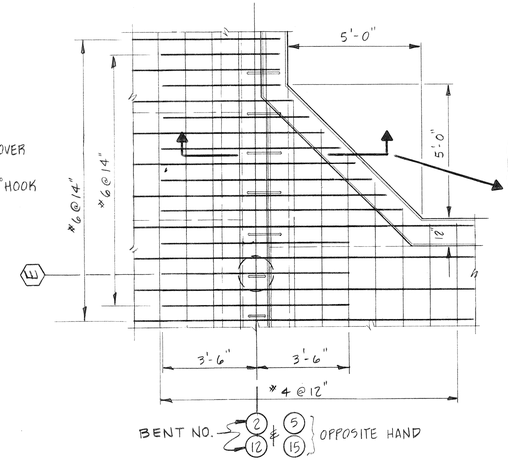

PLAN

5/10/10 **CORNER DECK & CURB DETAILS**

SCALE: ¾" = 1'-0"

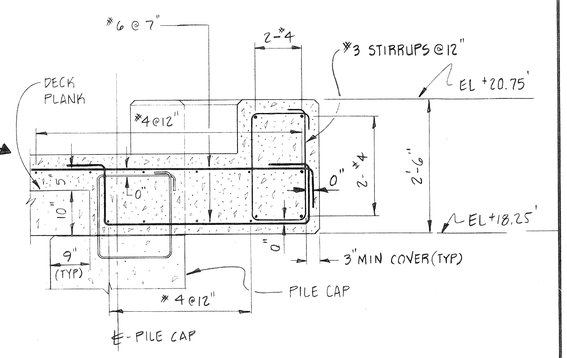

SECTION

SCALE: ¾" = 1'-0"

CAST-IN-PLACE DECK

INTERNATIONAL FERRY TERMINAL

PORTLAND, MAINE

FEBRUARY 1988

STATE OF MAINE — DAVID LIVINGSTON PORTER No. 4788 — REGISTERED PROFESSIONAL ENGINEER

CHILDS ENGINEERING CORPORATION
BOX 333 MEDFIELD, MASSACHUSETTS 02052 U.S.A.

CHILDS ENGINEERING CORPORATION

REVISIONS

DRAWN: M.FOLEY
CHECKED: RGF
APPD: DLP
DATE: 2/88

DWG NO. 81387.00-11
SHEET 10 OF 17

12908
MILLER REPROGRAPHICS CO

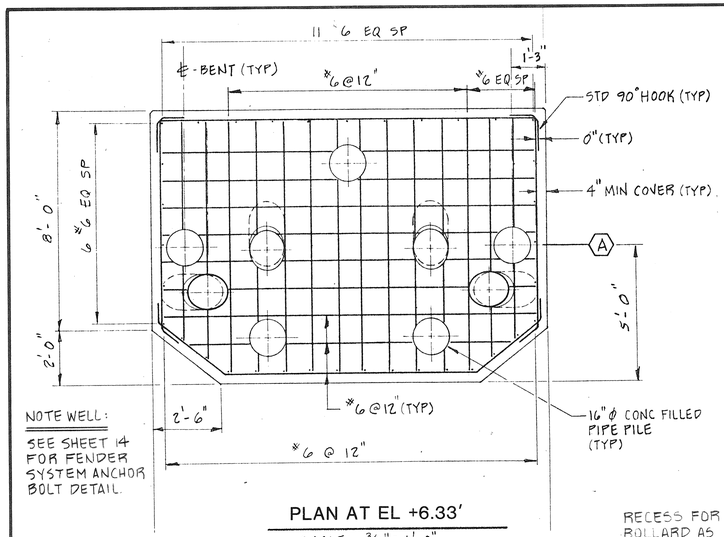

NOTE WELL:
SEE SHEET 14 FOR FENDER SYSTEM ANCHOR BOLT DETAIL.

PLAN AT EL +6.33'

SCALE: 3/8" = 1'-0"

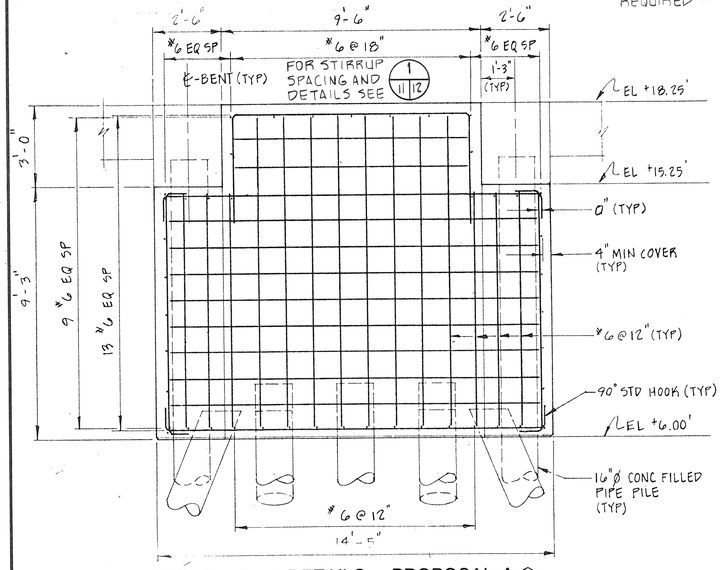

FENDER DOLPHIN DETAILS - PROPOSAL A (PROPOSAL B SIMILAR)

1/6 11

SCALE: 3/8" = 1'-0"

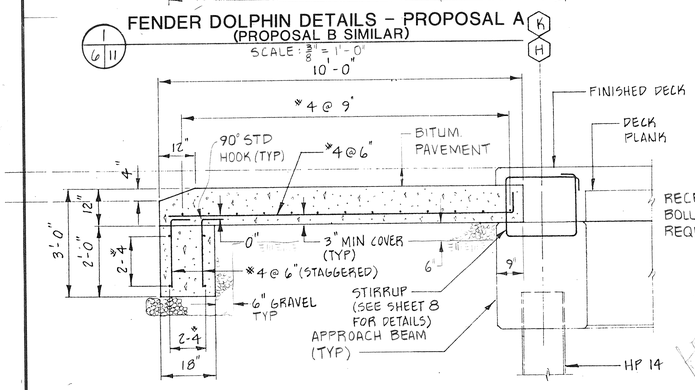

5/4 11 APPROACH SLAB - DETAILS

SCALE: 1/2" = 1'-0"

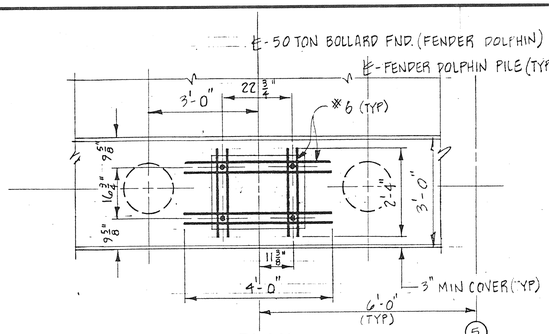

PLAN

SCALE: 1/2" = 1'-0"

5 9 13 17

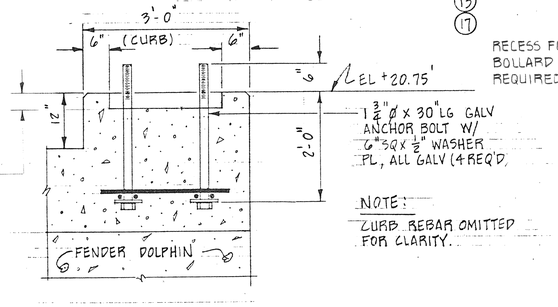

SECTION

2 10 11 50 TON BOLLARD REINFORCING - DETAIL

SCALE: 3/4" = 1'-0"

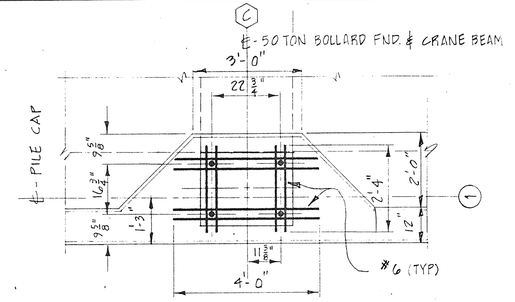

PLAN

SCALE: 1/2" = 1'-0"

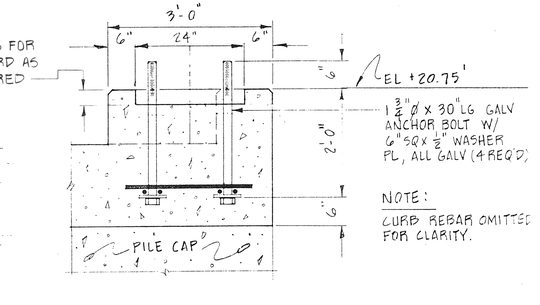

SECTION

3 10 11 50 TON BOLLARD REINFORCING - DETAIL

SCALE: 3/4" = 1'-0"

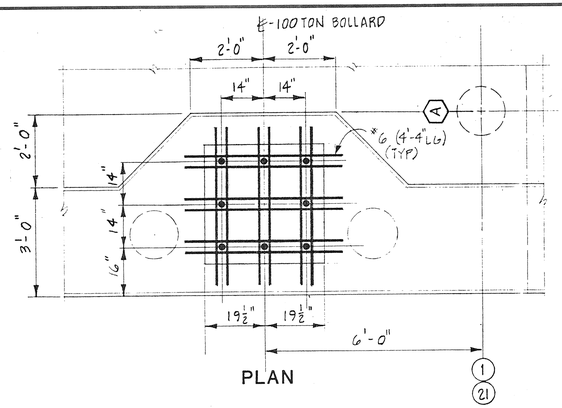

PLAN

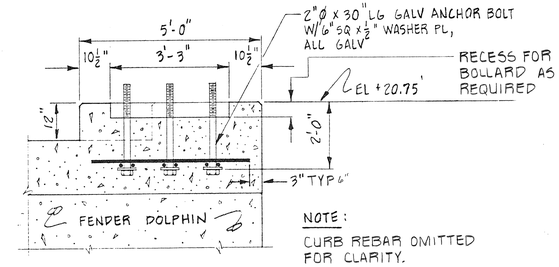

SECTION

4 10 11 100 TON BOLLARD REINFORCING - DETAIL

SCALE: 1/2" = 1'-0"

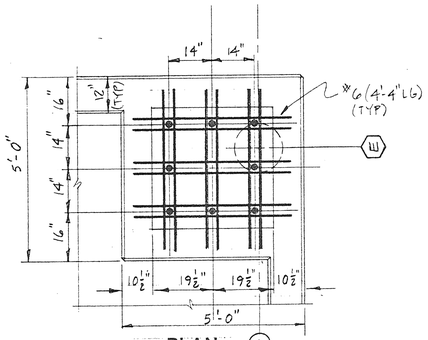

PLAN

1 22 BENT # (OPPOSITE HAND)

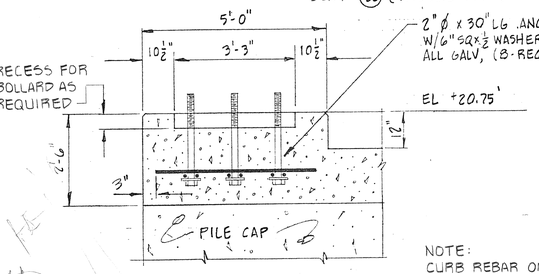

NOTE:
CURB REBAR OMITTED FOR CLARITY

SECTION

6 10 11 100 TON BOLLARD REINFORCING DETAILS

SCALE: 1/2" = 1'-0"

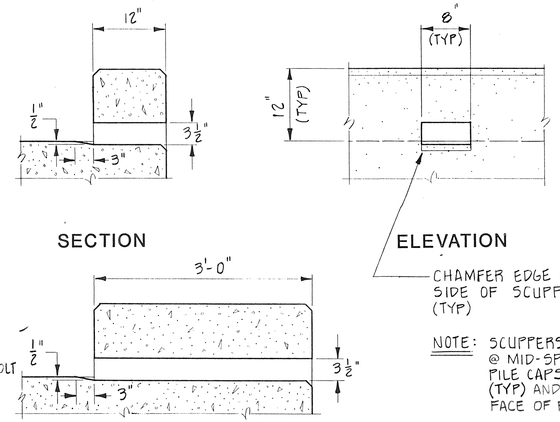

SECTION

ELEVATION

NOTE: SCUPPERS LOCATED @ MID-SPAN BETWEEN PILE CAPS, 12'-0" OC (TYP) AND AT BENT 1 FACE OF PIER.

7 10 11 DETAIL - SCUPPER

SCALE: 1" = 1'-0"

NOTE:
1.) ALL BOLLARD ANCHOR BOLTS SHALL BE GALVANIZED HIGH STRENGTH BOLTS (ASTM A449)
2.) ALL BOLLARD ANCHOR BOLTS SHALL BE CUT FLUSH TO THE BOLT NUT AFTER BOLLARD INSTALLATION. ALL COUNTERSUNK HOLES SHALL BE FILLED WITH AN APPROVED SEALANT.
3.) ALL BOLLARDS SHALL BE SET ONTO A BED OF HIGH STRENGTH NON-SHRINK GROUT. DEPTH OF GROUT SHALL BE AS REQUIRED FOR COMPLETE BEARING.

CONCRETE REINFORCING NOTES:
1.) PILES SHOWN ARE PIPE PILES, (PROPOSAL "A" DETAILS SIMILAR FOR H-PILES, PROPOSAL "B")
2.) CONCRETE SHALL HAVE A COMPRESSIVE STRENGTH OF 4000 PSI @ 28 DAYS.
3.) REINFORCING SHALL BE GRADE 60 EPOXY COATED.
4.) CHAMFER ALL EDGES 1" @ 45° EXCEPT WHERE NOTED.
5.) MINIMUM CONCRETE COVERAGE OVER REINFORCING SHALL BE 3".
6.) SPLICING OF REINFORCEMENT: #6 BARS - 24" #4 BARS - 12".

REINFORCING DETAILS

INTERNATIONAL FERRY TERMINAL PORTLAND, MAINE

FEBRUARY 1988

STATE OF MAINE DAVID LIVINGSTON PORTER No. 4788 REGISTERED PROFESSIONAL ENGINEER

CHILDS ENGINEERING CORPORATION
BOX 333 MEDFIELD, MASSACHUSETTS 02052 U.S.A.

DRAWN: M.FOLEY
CHECKED: RGF
APPD: DLP
DATE: 2/88

DWG NO 81387.00-12
SHEET 11 OF 17

REVISIONS

MILLER REPROGRAPHICS CO

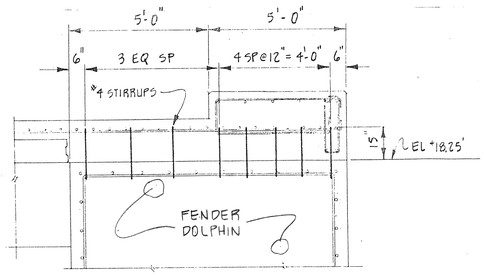

SECTION AT 5'-0" CURB

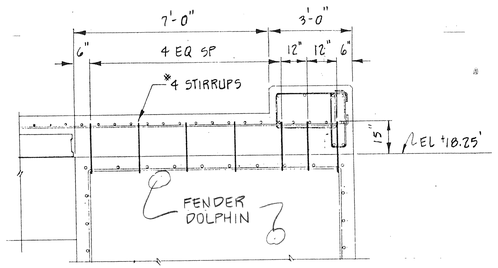

SECTION AT 3'-0" CURB

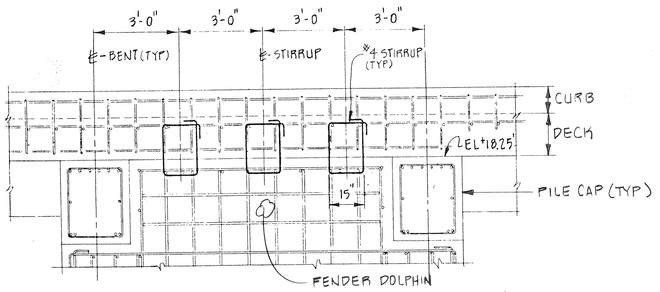

ELEVATION

1 / 11 | 12 DOLPHIN/DECK STIRRUP PLACEMENT DETAILS

SCALE: $\frac{3}{8}$" = 1'-0"

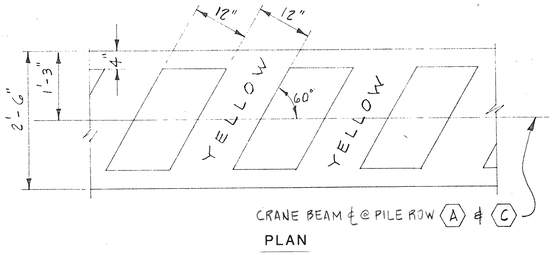

PLAN

PAINTING SCHEME –
CRANE PAD PLACEMENT LANE

SCALE: $\frac{3}{4}$" = 1'-0"

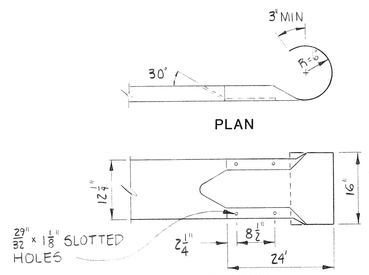

GUARD RAIL – TERMINAL END

SCALE: $\frac{3}{4}$" = 1'-0"

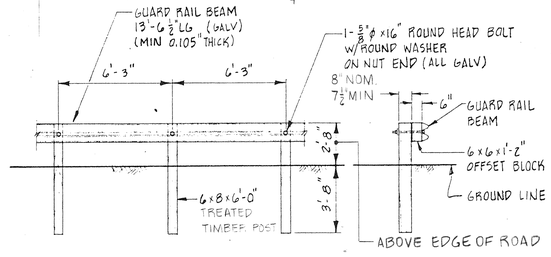

ELEVATION SECTION

2 / 4 | 12 GUARD RAIL DETAILS

SCALE: $\frac{1}{4}$" = 1'-0"

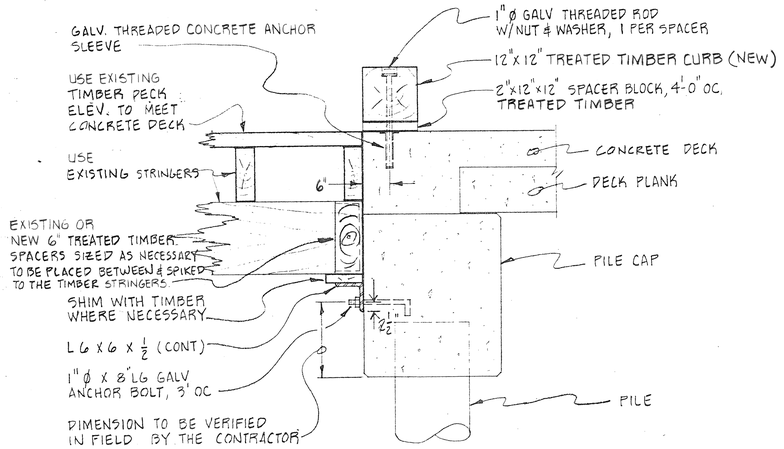

SECTION

4 / 10 | 12 EXISTING TO NEW PIER CONNECTION DETAIL

SCALE: $\frac{3}{4}$" = 1'-0"

NOTES:

1.) NEW TIMBER TO BE TREATED

2.) ALL TIMBER FIELD CUTS AND HOLES SHALL BE FIELD-TREATED. BOLTS TO BE GALVANIZED AND CONFORM TO ASTM A307.

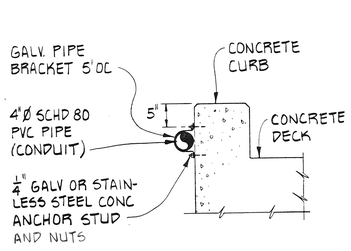

SECTION

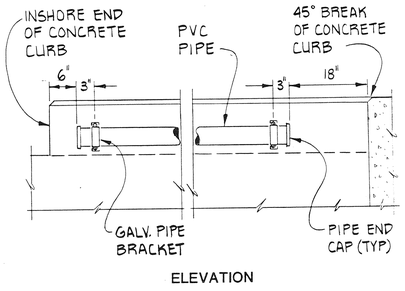

ELEVATION

3 / 4 | 12 PVC PIPE ASSEMBLY DETAIL

SCALE: $\frac{3}{4}$" = 1'-0"

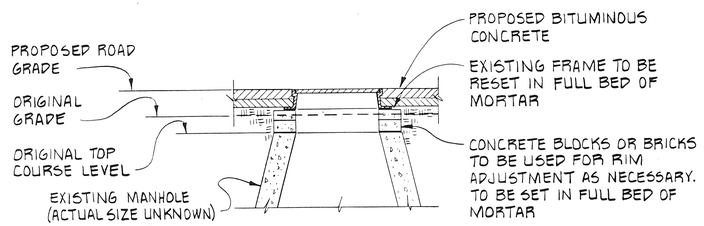

SECTION

MANHOLE ADJUSTMENT DETAIL

N.T.S.

STATE OF MAINE · DAVID LIVINGSTON · 5128 · No. 4788 · REGISTERED PROFESSIONAL ENGINEER

MISCELLANEOUS DETAILS

INTERNATIONAL FERRY TERMINAL

PORTLAND, MAINE

FEBRUARY 1988

REVISIONS

CHILDS ENGINEERING CORPORATION
BOX 333 MEDFIELD, MASSACHUSETTS 02052 U.S.A.

DRAWN: M. FOLEY
CHECKED: RGF
APPD: DLP
DATE: 2/88

DWG NO. 81387.00-13
SHEET 12 OF 17

MILLER REPROGRAPHICS CO

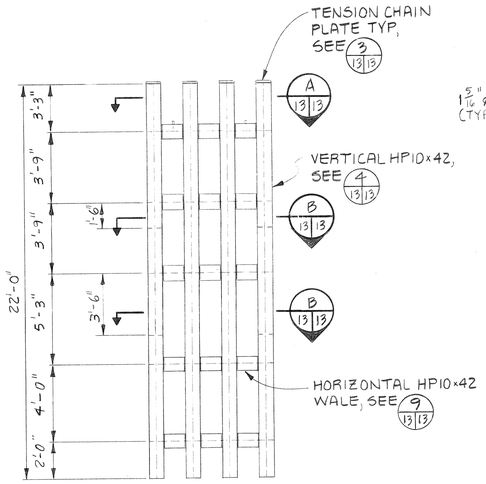

ELEVATION
SCALE: $\frac{1}{4}$"=1'-0"

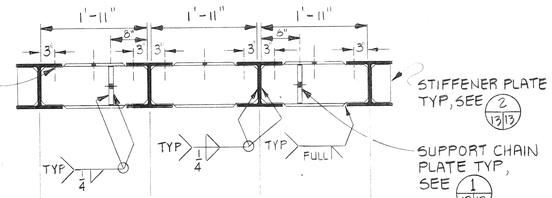

A 13/13 SECTION
SCALE: $\frac{3}{4}$"=1'-0"

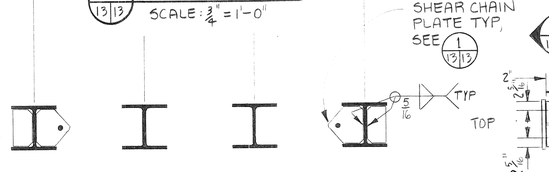

B 13/13 SECTION
SCALE: $\frac{3}{4}$"=1'-0"

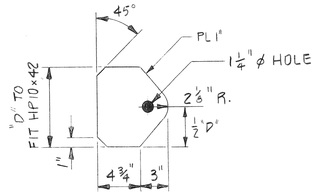

1 13/13 SUPPORT CHAIN & SHEAR CHAIN PLATE
SCALE: $1\frac{1}{2}$"=1'-0"

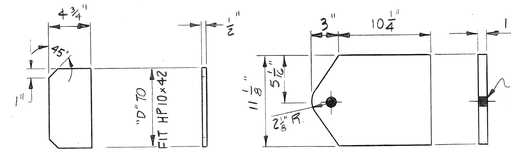

2 13/13 STIFFENER PLATE
SCALE: $1\frac{1}{2}$"=1'-0"

3 13/13 TENSION CHAIN PLATE
SCALE: $1\frac{1}{2}$"=1'-0"

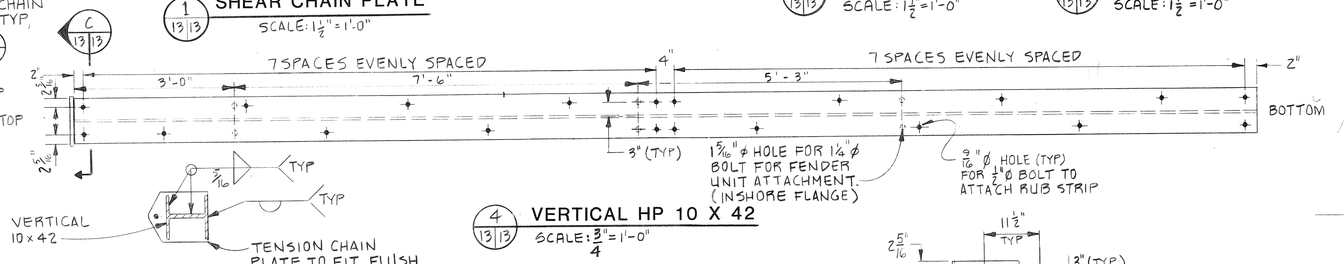

C 13/13 SECTION
SCALE: $\frac{3}{4}$"=1'-0"

4 13/13 VERTICAL HP 10 X 42
SCALE: $\frac{3}{4}$"=1'-0"

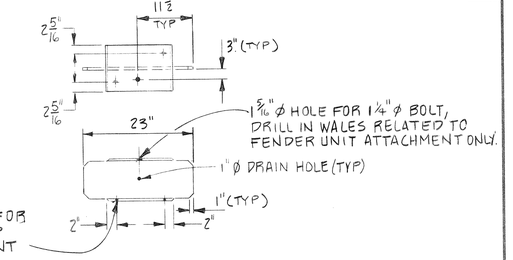

9 13/13 HORIZONTAL HP10 X 42
SCALE: $\frac{3}{4}$"=1'-0"

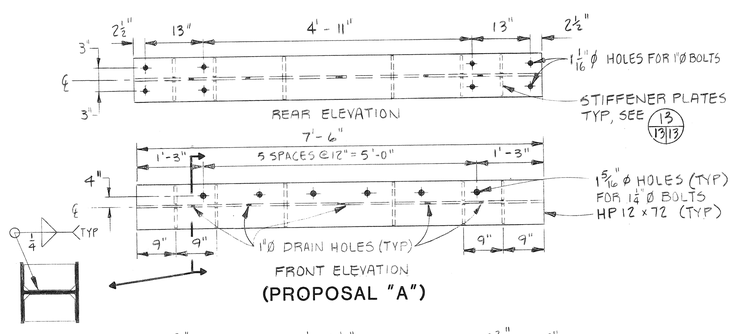

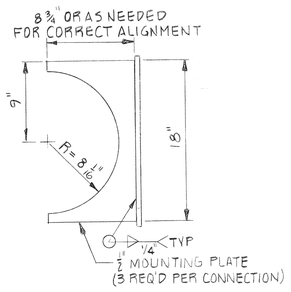

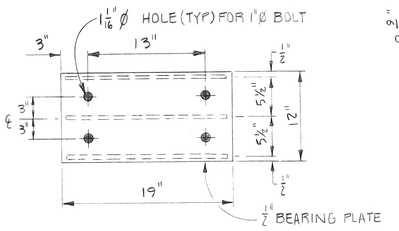

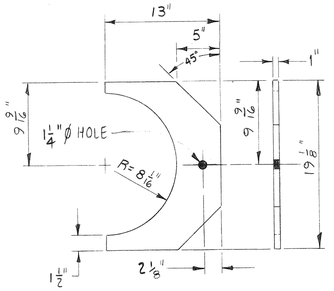

SHEAR CHAIN PILE PLATE FOR PIPE PILE

8 14/13 (PROPOSAL "A")
SCALE: $1\frac{1}{2}$"=1'-0"

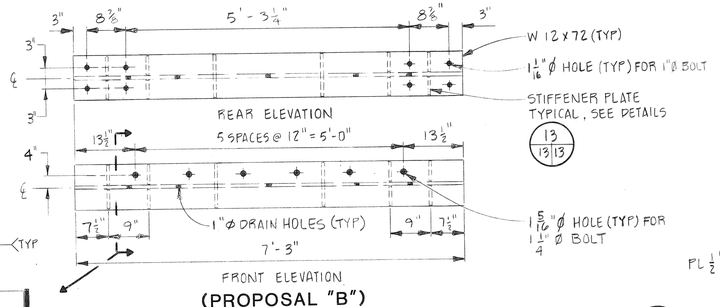

7 14/13 SUPPORT BEAM CONNECTION
SCALE: $1\frac{1}{2}$"=1'-0"

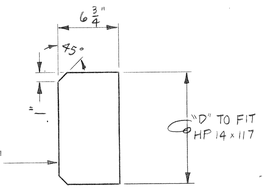

10 14/13 STIFFENER PLATE
(4 REQ'D PER PILE)

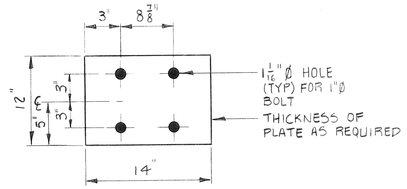

11 14/13 DETAIL - SHIM PLATE
(PROPOSAL "B")
SCALE: $1\frac{1}{2}$"=1'-0"

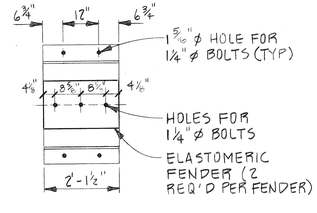

15 14/13 ELASTOMERIC FENDER UNIT
Scale: $\frac{1}{2}$"=1'-0"

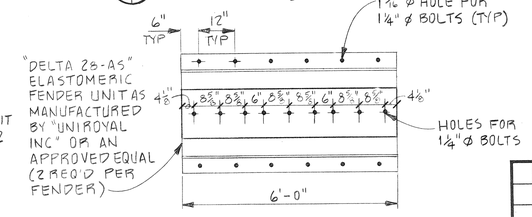

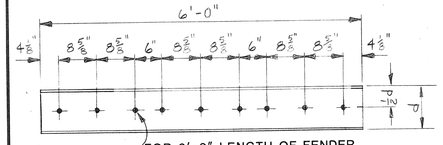

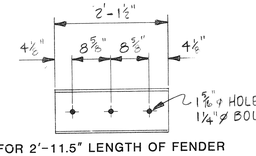

5 14/13 FENDER PILE SUPPORT BEAMS
SCALE: $\frac{3}{4}$"=1'-0"

6 14/13 RUBBER FENDER BACKING DETAIL
SCALE: $\frac{3}{4}$"=1'-0"

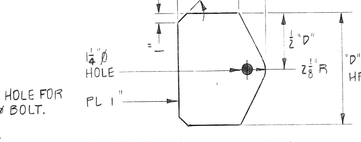

12 14/13 SHEAR CHAIN PLATE
PLATE DETAILS FENDER DOLPHIN PILE
(PROPOSAL "B")
SCALE: $1\frac{1}{2}$"=1'-0"

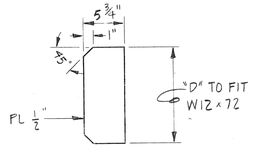

13 13/13 STIFFENER PLATE DETAIL
(PROPOSAL "A" & "B")
SCALE: $1\frac{1}{2}$"=1'-0"

14 14/13 ELASTOMERIC FENDER UNITS
SCALE: $\frac{1}{2}$"=1'-0"

FENDER FABRICATION

INTERNATIONAL FERRY TERMINAL
PORTLAND, MAINE

FEBRUARY 1988

CHILDS ENGINEERING CORPORATION
BOX 333 MEDFIELD, MASSACHUSETTS 02052 U.S.A.

REVISIONS

DRAWN: RWH, MTF
CHECKED: RGF
APPD: DLP
DATE: 2/88

DWG NO. 81387.00-14
SHEET 13 OF 17

300 C.D.

MILLER REPROGRAPHICS CO.

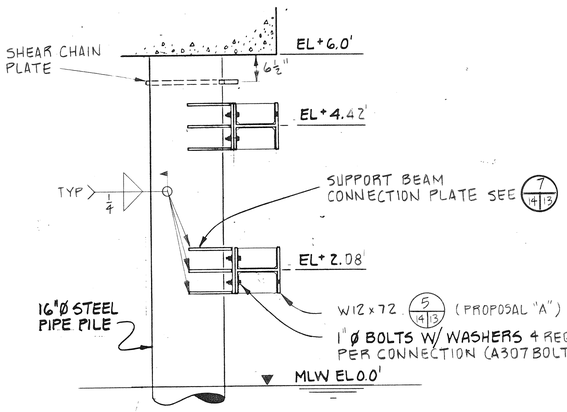

PROPOSAL "A"

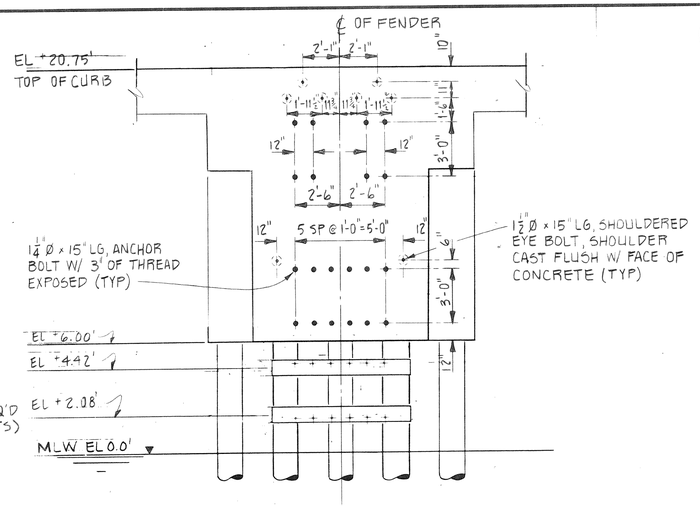

FENDER BOLTING PATTERN – ELEVATION

SCALE: 1/4" = 1'-0"

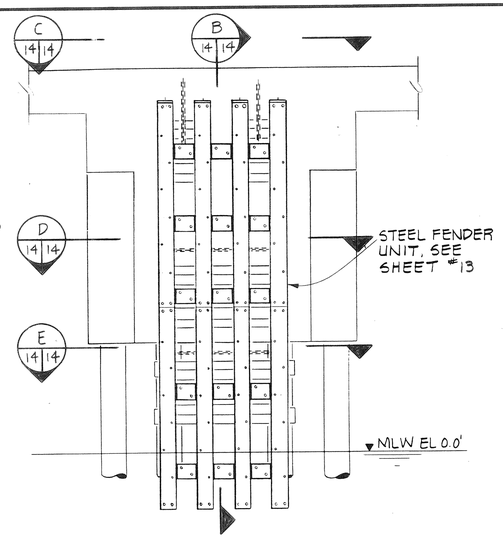

FENDER ASSEMBLY – ELEVATION

SCALE: 1/4" = 1'-0"

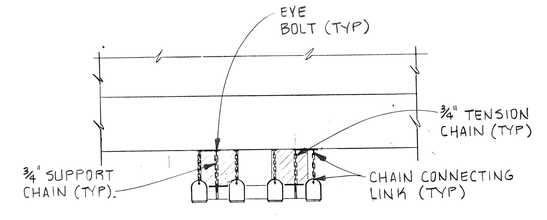

PLAN AT DECK ELEVATION

C 14/14 FENDER CHAIN INSTALLATION

SCALE: 1/4" = 1'-0"

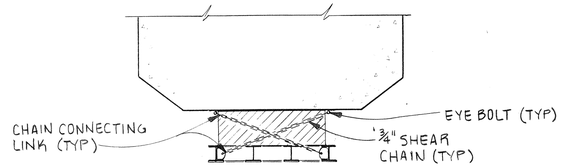

PLAN AT ELEVATION +12.0'

D 14/14 FENDER CHAIN INSTALLATION

SCALE: 1/4" = 1'-0"

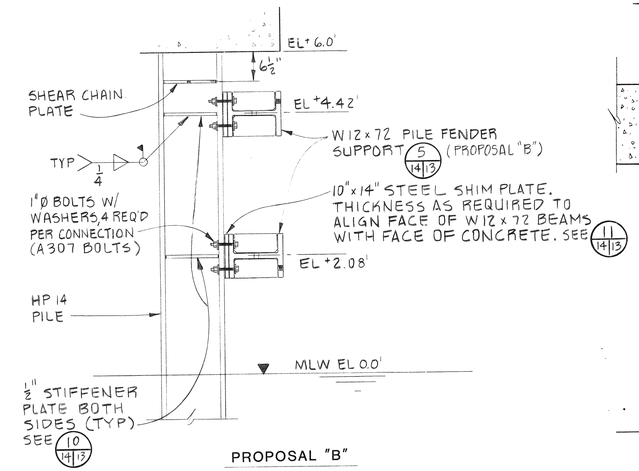

PROPOSAL "B"

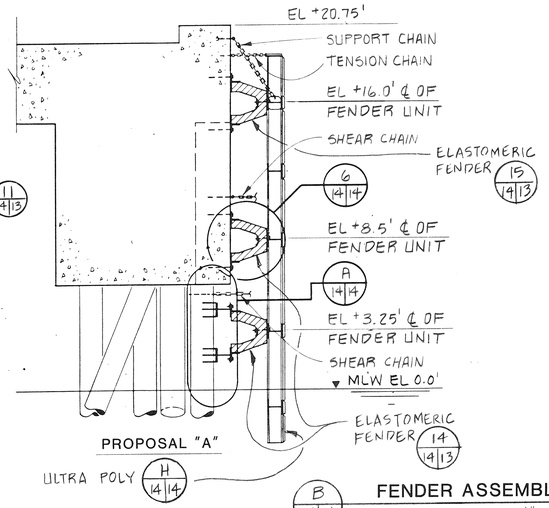

PROPOSAL "A"

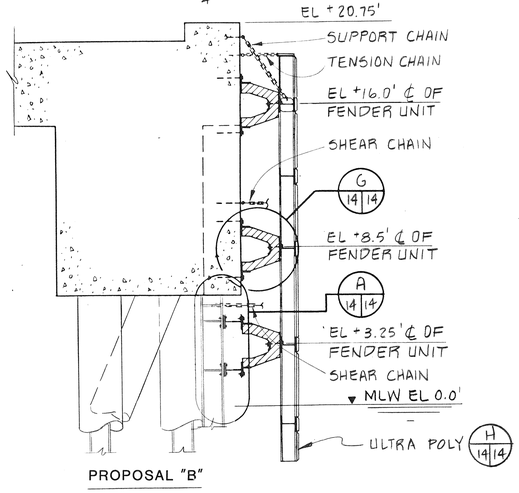

PROPOSAL "B"

B 14/14 FENDER ASSEMBLY – SECTION

SCALE: 1/4" = 1'-0"

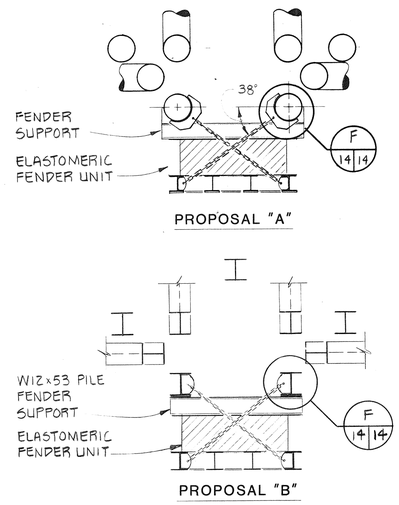

PROPOSAL "A"

PROPOSAL "B"

E 14/14 FENDER CHAIN INSTALLATION

SCALE: 1/4" = 1'-0"

A 14/14 LOWER FENDER ATTACHMENT DETAIL

SCALE: 3/4" = 1'-0"

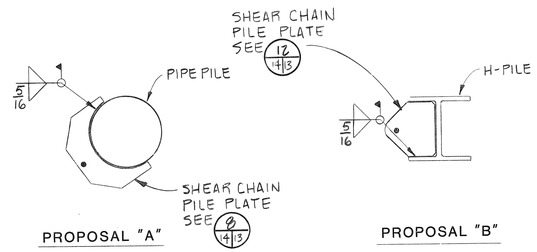

PROPOSAL "A" PROPOSAL "B"

F 14/14 SHEAR CHAIN PLATE FASTENING DETAIL

SCALE: 3/4" = 1'-0"

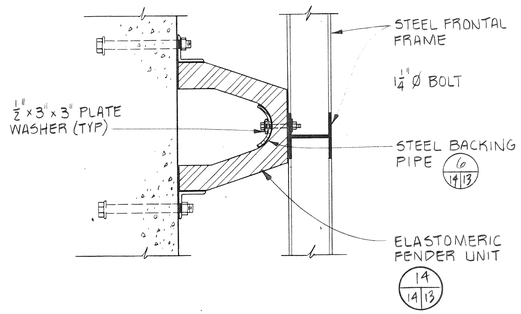

G 14/14 ELASTOMERIC FENDER ATTACHMENT – SECTION

SCALE: 3/4" = 1'-0"

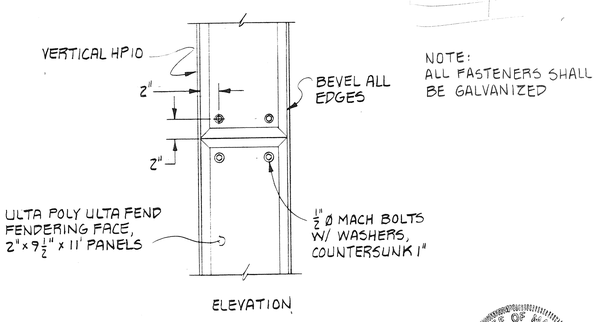

ELEVATION

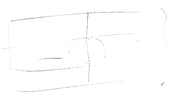

NOTE:
ALL FASTENERS SHALL BE GALVANIZED

H 14/14 ULTRA POLY DETAIL

SCALE: 1½" = 1'-0"

STATE OF MAINE
DAVID LIVINGSTON PORTER
No. 6783
REGISTERED PROFESSIONAL ENGINEER

FENDER DOLPHIN ASSEMBLY

INTERNATIONAL FERRY TERMINAL
PORTLAND, MAINE

FEBRUARY 1988

CHILDS ENGINEERING CORPORATION
BOX 333 MEDFIELD, MASSACHUSETTS 02052 U.S.A.

DRAWN: RWH
CHECKED: DLP

DWG NO. 81387.00-15

129068
MILLER REPROGRAPHICS CO.

COMMERCIAL STREET

EXISTING EDGE OF PAVEMENT

PL EDGE

UP #45

UP #46

OWG

R=2300 (TYP)

COMPACTED GRAVEL STORAGE AREA

EXISTING STONE SEAWALL

MHW

MLW

PL

EDGE

± 24' WIDE BITUMINOUS CONCRETE DRIVE

COMPACTED GRAVEL STORAGE AREA

PROPOSED ISLAND

EXISTING BITUMINOUS CONCRETE DRIVE

UT

GUARD RAIL

SAW CUT EXISTING PAVEMENT BACK 2'

5' MIN

CB

SMH

MH

SD

SD 10"

ISLAND

TMH

EXISTING CONCRETE TO BE REMOVED

EAST-WEST CONSTRUCTION BASELINE

GUARDRAIL

A

B

C

D

LEGEND

15 EXISTING CONTOUR

12 PROPOSED CONTOUR

NOTE:

1.) SEE SHEETS 16 & 17 FOR CROSS SECTIONS AND PROFILES.

STATE OF MAINE
DAVID LIVINGSTON PORTER
No. 4788
REGISTERED PROFESSIONAL ENGINEER

SCALE 1"=20'

BACKLANDS GENERAL ARRANGEMENT

INTERNATIONAL FERRY TERMINAL
PORTLAND, MAINE

FEBRUARY 1988

CHILDS ENGINEERING CORPORATION
BOX 333 MEDFIELD, MASSACHUSETTS 02052 U.S.A.

REVISIONS

DRAWN: JP/MF
CHECKED: RGF
APPD: DLP
DATE: 2/88

DWG NO. 81387.00-16
SHEET 15 OF 17

MILLER REPROGRAPHICS CO

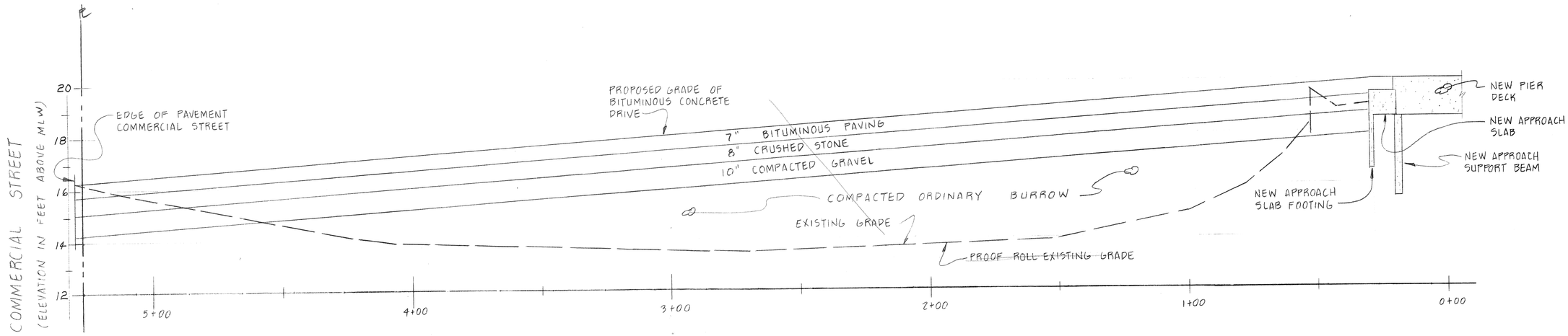

PROFILE B-B

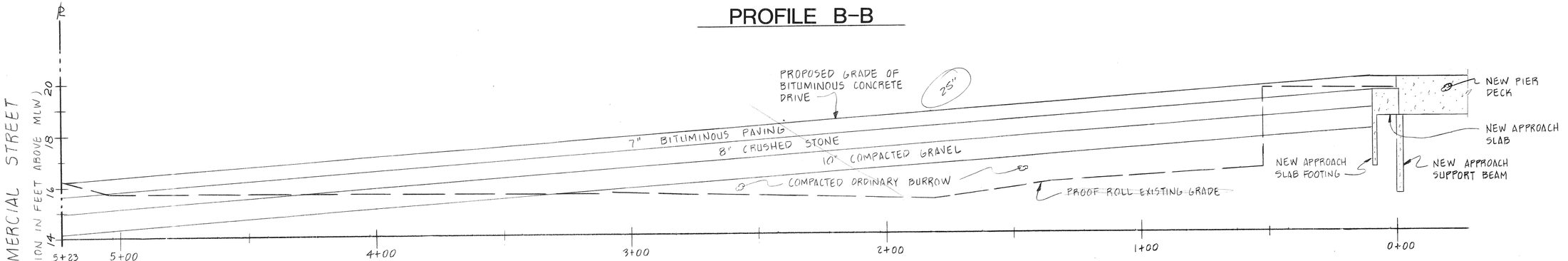

PROFILE A-A

SCALES: HORIZONTAL 1" = 20'
VERTICAL 1" = 2'-0"

BACKLANDS CROSS - SECTION

NOTE:
1.) SEE SHEET 15 FOR PROFILE LOCATIONS.

INTERNATIONAL FERRY TERMINAL
PORTLAND, MAINE

FEBRUARY 1988

STATE OF MAINE
DAVID LIVINGSTON PORTER
No. 4788
REGISTERED PROFESSIONAL ENGINEER

CHILDS ENGINEERING CORPORATION
BOX 333 MEDFIELD, MASSACHUSETTS 02052 U.S.A.

CHILDS ENGINEERING CORPORATION

DRAWN: JP, MTF
CHECKED: RGF
APPD: DLP
DATE: 2/88

DWG NO. 81387.00-17
SHEET 16 OF 17

REVISIONS

MEYER REPROGRAPHICS CO.